NISTIR 6288

NIST Workshop on Standards Development for the Use of Fiber Reinforced Polymers for the Rehabilitation of Concrete and Masonry Structures, January 7-8, 1998, Tucson, Arizona. Proceedings

Editor:
Dat Duthinh[1]

Session secretaries:	Session chairs:	Session co-chairs:
Dat Duthinh[1]	Hamid Saadatmanesh	Yan Xiao
John L. Gross[1]	Antonio Nanni	Edward Fyfe
Oscar Barton Jr.	Orange Marshall	Mohammed Ehsani

[1]Structures Division
Building and Fire Research Laboratory
National Institute of Standards and Technology
Gaithersburg, MD 20899-001

February 1999

United States Department of Commerce
Technology Administration
National Institute of Standards and Technology

NISTIR 6288

NIST Workshop on Standards Development for the Use of Fiber Reinforced Polymers for the Rehabilitation of Concrete and Masonry Structures, January 7-8, 1998, Tucson, Arizona. Proceedings

Editor:
Dat Duthinh

Session secretaries:	Session chairs:	Session co-chairs:
Dat Duthinh[1]	Hamid Saadatmanesh	Yan Xiao
John L. Gross[1]	Antonio Nanni	Edward Fyfe
Oscar Barton Jr.	Orange Marshall	Mohammed Ehsani

[1]Structures Division
Building and Fire Research Laboratory
National Institute of Standards and Technology
Gaithersburg, MD 20899-8611

February 1999

U.S. Department of Commerce
William M. Daley, *Secretary*
Technology Administration
Gary Bachula, *Acting Under Secretary for Technology*
National Institute of Standards and Technology
Raymond G. Kammer, *Director*

ABSTRACT

Keywords: beams; building technology; columns; fiber reinforced polymers; masonry; rehabilitation; reinforced concrete; repair; retrofit; seismic; standards; slabs; walls.

One of the impediments to the expansion of the use of fiber-reinforced polymer (FRP) composites for the rehabilitation of structures is the lack of design standards, which is the subject of this workshop. By bringing together researchers from academia, practitioners from industry and regulators from government, it aims at providing a snapshot of the state of the practice and establishing research needs to develop national standards on the use of FRP composites for the rehabilitation of concrete and masonry structures. The workshop included a plenary session where nine speakers defined the issues and established a framework for the discussion. Next, participants broke out into three separate sessions, on columns, beams and slabs, and walls, respectively.

Areas in need of further research include anchorage of FRP to beams and walls, ductility of beams and walls reinforced with FRP, durability, material safety factors, fire resistance, and nondestructive evaluation methods for quality assurance of field installation. The workshop participants encouraged NIST to be active in researching solutions to all the above issues and to work closely with standards writing organizations, such as ACI, ASTM, ASCE, AASHTO in developing the technical bases for standards for the use of FRP composites in the rehabilitation of civil infrastructure. In particular, the participants would like to see NIST take a leading role in tests of FRP-reinforced concrete and masonry structures subjected simultaneously to fire and loads; to serve as a national data center for FRP material properties, laboratory tests and field performance; and to develop a comprehensive *Handbook on Structural Repair with FRP* similar in scope to the EUROCOMP *Design Code and Handbook* (1996).

ACKNOWLEDGMENTS

The editor wishes to thank all workshop participants and the following reviewers: Nicholas Carino, Joannie Chin, Geraldine Cheok and Shyam Sunder, all with the Building and Fire Research Laboratory of NIST.

DISCLAIMER

Trade or manufacture's names appear herein because they are essential to the objectives of this document. The United States Government does not endorse products or manufacturers.

EXECUTIVE SUMMARY

A significant percentage of the Nation's infrastructure is in need of *repair* due to aging, exposure to the natural environment, de-icing salts, etc. Beside repair, there is a need for structural *retrofit* in many structures, due to higher service loads, more stringent seismic or blast requirements, etc. The market for structural *rehabilitation*, which encompasses both of these activities, is potentially in the billions of dollars.

Fiber-reinforced polymer (FRP) composites have proved to be an effective solution to structural rehabilitation. Carbon, glass or Aramid fibers imbedded in a polymeric resin (CFRP, GFRP or AFRP) exhibit high strength, light weight and ease of installation that make them competitive with more traditional construction materials, such as steel. The disadvantages, compared with steel, is higher material cost, lower stiffness, the absence of a long experience in the application of these materials to civil engineering, and the lack of design standards.

It is this last aspect that is the subject of this workshop. By bringing together researchers from academia, practitioners from industry and regulators from government, it aims at providing a snapshot of the state of the practice and establishing research needs to develop national standards on the use of FRP composites for the rehabilitation of concrete and masonry structures. The workshop took place on 7-8 January, 1998, immediately following the Second International Conference on Composites in Infrastructure (ICCI 98) held in Tucson, Arizona. It started with a plenary session where nine speakers were invited to define the issues and establish a framework for the ensuing discussion. The following day, participants broke out into three separate sessions, on columns, beams and slabs, and walls, respectively. At the end of the day, all participants reconvened together, to listen to and discuss the summaries of each session.

State of the practice:

The most advanced area is the rehabilitation of columns with FRP composites, thanks to the pioneering research at the University of California at San Diego and seismic retrofit work contracted by the California Department of Transportation (Caltrans). The wrapping of columns with FRP composites increases the strength and ductility of columns significantly by improving resistance to failures caused by shear, poor confinement or lap splice debonding. The Caltrans Guidelines will undoubtedly serve as a useful starting point for AASHTO (American Association of State, Highway and Transportation Officials) Technical Committee T21, which is developing national standards for the use of FRP composites for transportation structures.

Design methods for the external strengthening of beams in flexure with FRP composites were first developed at the EMPA (Swiss Federal Laboratories for Materials Testing and Research) in Dübendorf, Switzerland. They are based on hypotheses of strain compatibility (no slip) and plane sections remaining plane. Design for shear is also similar to steel reinforced concrete (RC) beams: shear strength consists of the sum of a concrete, or masonry, term and a reinforcement term based on a truss model.

Least advanced is the rehabilitation of RC and masonry walls. Structural walls resist loads by a combination of in-plane compression, shear, bending and out-of-plane bending. As in-plane compression increases, the need for and the effectiveness of FRP composites as tensile reinforcement

decrease. Horizontal FRP strips are effective against in-plane shear and vertical strips against bending. Continuous sheets are also effective, but moisture entrapment may be a durability problem.

Material test standards for FRP exist, thanks to ASTM (American Society for Testing Materials), and work is in progress to adapt them from aerospace to civil engineering applications. ACI (American Concrete Institute) Committee 440 is working on *Guidelines for Selection, Design and Installation of Fiber Reinforced Polymer (FRP) Systems for Externally Strengthening Concrete Structures.*

Research Needs:

- **Anchorage:** Most of the test beams externally strengthened with FRP composites fail by debonding of the laminate. Because of this problem, the FRP reinforcement is designed for a rather low level of stress (less than 40 % of ultimate), resulting in an inefficient use of this expensive material. Anchorage for shear strips is particularly problematic as the beam top surface is often inaccessible. For walls, the difference in performance of an FRP sheet anchored to floor slabs compared to an unanchored one is drastic. As proper anchorage is sometimes difficult and expensive, practical devices and methods need to be developed.

- **Ductility:** The rehabilitation of columns and walls with FRP composites results usually in a considerable increase in the ductility of these structural components and thus enhances their seismic performance. For RC beams strengthened with FRP in flexure, the preferred mode of failure is by crushing of the concrete, a relatively brittle mode of failure. The alternatives, debonding or rupture of the FRP, are even more catastrophic. Research is needed to show that this strengthening method still allows sufficient ductility to permit load redistribution and provide warning of impending failure.

- **Durability:** Much of the interest in the use of FRP composites in infrastructure is in response to the corrosion of steel reinforcement due to exposure to the environment, de-icing salts, etc. For FRP composites, numerous accelerated aging tests have been performed, but they are no substitute for a long experience in the use of these materials. Whereas carbon fibers are the most resistant to **chemical attack**, glass fibers deteriorate in the alkaline environment of concrete pore water, and Aramid fibers are vulnerable to ultra-violet radiation. More resistant resins, new types of glass fibers (alkali resistant or AR glass) and protective coatings may provide the answers.

  Moisture absorption can result in a loss of strength of 25 % to 30 % in cross-linked polymers. Design of FRP reinforcement should allow the structure to "breathe", i.e., moisture to escape. Moisture is especially harmful when it acts in conjunction with high temperatures or freezing and thawing cycles.

  Creep rupture is a concern when FRP composites are subjected to sustained loads. Glass fibers have a lower creep rupture time than carbon. Based on limited testing, researchers have recommended that for loads not exceeding 50 years in duration, the level of stress be limited to 30 % of ultimate for GFRP, 50 % for AFRP and 80 % for CFRP. More research is needed to confirm or refine these results.

- **Material safety factors:** Considerations of durability, concerns for brittle failure, the lack of a long experience in designing with FRP composites, and the desire to use the Load Resistance Factor Design (LRFD) format of some building codes are reasons for material safety factors. There is a need for more test data to justify and refine these factors.

- **Fire resistance:** As the use of FRP for structural rehabilitation expands from highway bridges to buildings, concerns for their fire performance increase. FRP combustion properties appear to be in the acceptable range for construction materials in terms of flame spread and smoke developed (ASTM E 84). Combustion products also appear to be in the "normal range". Although polymers have been used in a variety of buildings as plastic foam insulation, membrane roofs, asphalt roofs, vinyl siding, and home furnishings, their further acceptance requires more test data and possibly the use of protective coatings or improved resins.

- **Nondestructive evaluation methods and quality control of field installation:** The performance of an FRP external strengthening depends strongly on its bond to the concrete or masonry substrate. Quantitative means of assessing the residual strength of the structural component to be repaired, the quality of its surfaces, and the surface preparation required are desirable. Fast, reliable, and inexpensive methods of quality control of field installation are also needed. One of the workshop papers presents a thermographic method that shows great promise for locating delaminations.

NIST role:

The workshop participants encouraged NIST to be active in researching solutions to all of the above issues and to work closely with standards writing organizations, such as ACI, ASTM, ASCE, AASHTO in developing the technical bases for standards for the use of FRP composites in the rehabilitation of civil infrastructure. In particular, the participants would like to see NIST take a leading role in tests of FRP-reinforced concrete and masonry structures subjected simultaneously to fire and loads; to serve as a national data center for FRP material properties, laboratory tests and field performance; and to develop a comprehensive *Handbook on Structural Repair with FRP* similar in scope to the EUROCOMP *Design Code and Handbook* (1996).

TABLE OF CONTENTS

ABSTRACT iii
ACKNOWLEDGMENTS iii
DISCLAIMER iii
EXECUTIVE SUMMARY iv

1. INTRODUCTION 1-1

1.1 Objective 1-1
1.2 Format 1-1

2. WORKING GROUPS 2-1

2.1 Working Group on Columns 2-1
2.2 Working Group on Beams and Slabs 2-7
2.3 Working Group on Walls 2-13
2.4 Overall Summary and Conclusions 2-18
2.5 References 2-19

3. INVITED PAPERS 3-0

3.1 "Application of composites in California bridges: quality control, specifications and testing program," by J. Roberts 3-1
3.1a Appendix: "Earthquake retrofit of bridge columns with continuous carbon fiber jackets: design guidelines," by F. Seible, N. Priestley and D. Innamorato .. 3-10
3.1b Appendix: "Composite column casings: memo to designers, Alternative column casing specifications, and AENC. DOC 8.11.97" by Caltrans 3-39
3.2 "Design considerations for the use of fiber reinforced polymeric composites in the rehabilitation of structures," by V. Karbhari and F. Seible 3-59
3.3 "Industry perspective on composite retrofit applications," by F. Policelli, L. Cercone, G. Ma and R. Johns 3-73
3.4 "Environmental durability of composites for seismic retrofit of bridge columns," by G. Steckel, G. Hawkins and J. Bauer 3-83
3.5 "Typical manufacturing flaws in FRP retrofit applications," by G. Hawkins, E. Johnson and J. Nokes 3-97
3.6 "In-situ testing to evaluate new repair techniques," by W. Gold and A. Nanni .. 3-102
3.7 "Draft design guidelines for concrete beams externally strengthened with FRP," by H. Ganga Rao and P.V. Vijay 3-113

4. WORKSHOP ORGANIZATION 4-1

4.1 Agenda 4-2
4.2 Questionnaire 4-3
4.3 Workshop Invited Participants 4-4
4.4 Working Group Participants 4-7

CHAPTER 1

INTRODUCTION

A significant percentage of the Nation's infrastructure is in need of *repair* due to aging, exposure to the natural environment, de-icing salts, etc. Beside repair, there is a need for structural *retrofit* in many structures, due to higher service loads, more stringent seismic or blast requirements, etc. The market for structural *rehabilitation*, which encompasses both of these activities, is potentially in the billions of dollars.

Fiber-reinforced polymer (FRP) composites have proved to be an effective solution to structural rehabilitation. Carbon, glass or Aramid fibers imbedded in a polymeric resin (CFRP, GFRP or AFRP) exhibit high strength, light weight and ease of installation that make them competitive with more traditional construction materials, such as steel. The disadvantages, compared with steel, is higher material cost, lower stiffness, the absence of a long experience in the application of these materials to civil engineering and the lack of design standards.

1.1 Objective

It is this last aspect that is the subject of this workshop. By bringing together researchers from academia, practitioners from industry and regulators from government, it aims at providing a snapshot of the state of the practice and establishing research needs to develop national standards on the use of FRP composites for the rehabilitation of reinforced concrete (RC) and masonry structures.

1.2 Format

The workshop took place in Tucson, Arizona, on 7-8 January, 1998, immediately following the Second International Conference on Composites in Infrastructure (ICCI 98). It started with a plenary session where nine speakers were invited to define the issues and establish a framework for the ensuing discussion. The following day, participants broke out into three separate sessions, on columns, beams and slabs, and walls, respectively. At the end of the day, all participants reconvened together, to listen to and discuss the summaries of each session. Details of the workshop organization are given in Chapter 4. In editing these proceedings, for completeness and coherence, the editor has combined with the oral discussion some of the written responses to a questionnaire sent to all participants and a review of the current literature (Chapter 2).

An overview of bridge column seismic retrofit in California and design guidelines are given by Roberts in Chapter 3. These guidelines are based on work performed at the University of California at San Diego, presented in two papers by Seible et al., and are commented on by Ma. Two of the requirements in the California Department of Transportation (Caltrans) guidelines are addressed in two papers by Hawkins et al.: durability and quality control of field installation. These papers present results of environmental durability tests on FRP composites, and thermographic measurements of delamination in column casings. Another way of ensuring field performance is shown by Nanni in a paper on in-situ testing of a structure strengthened with FRP. Finally, Ganga Rao et al. propose design guidelines for the external strengthening of RC beams with FRP composites.

CHAPTER 2

WORKING GROUPS

2.1 WORKING GROUP ON COLUMNS

Participants: Grant Corboy, Dat Duthinh (Secretary), Roger Green, Vistasp Karbhari, James Korff, Gloria Ma, Barry Olson, James Roberts, Hamid Saadatmanesh (Chair), Milan Vatovec, Yan Xiao (Co-chair).

2.1.1 INTRODUCTION

Some of the most successful structural uses of FRP (fiber-reinforced polymer) composites have been in the seismic retrofit of bridge columns. This includes, not only repair of columns damaged in earthquakes, but also upgrading of old columns to higher seismic standards. In the U.S.A., the seismic retrofit of concrete columns with FRP wraps was pioneered by the California Department of Transportation (Caltrans) and the University of California at San Diego (UCSD). Further work was also performed at the University of Arizona at Tucson.

In addition to seismic retrofit, FRP has also been used successfully to strengthen against blasts, to repair columns deteriorated by exposure to de-icing chemicals or cycles of freezing and thawing, and to minimize the infiltration of water, which acts as a catalyst for alkali-silica reaction.

Fyfe (1994) mentioned seventeen applications (as of May 1994), about half of which were in California, where FRP jackets were used to seismically strengthen bridges and buildings (about an equal number of each). Roberts (1997) described more recent (up to 1996) repair applications. In some of them, a wrapping machine was used, which required no heavy lifting equipment and could wrap a 6 m (20 ft) high column in two hours. The column was heat cured under controlled conditions by electrically heated blankets or enclosures. In addition to California, Washington and Pennsylvania have initiated at least one project to seismically retrofit one existing highway bridge.

This summary of the working group discussion on column retrofit using FRP has been expanded with the available literature to make it more readable and complete. It starts with the reasons for the seismic retrofit of columns, then continues with issues of current interest.

2.1.2 REASONS FOR COLUMN SEISMIC RETROFIT

The lessons of the San Fernando (1971) earthquake prompted Caltrans to raise design standards for new bridges and to retrofit old ones. This retrofit was performed by strengthening bridge piers, among other members, with steel jackets, and more recently, after the Loma Prieta (1989) earthquake, with FRP jackets (carbon fiber pre-impregnated with resin). The structural

effectiveness of steel jackets was demonstrated by their excellent performance during the Northridge (1994) earthquake. Fifteen wrapped columns in a major interchange in the Los Angeles area survived this magnitude 6.8 event without serious damage (Mc Ghee and Gomez 1996). Tests have shown that FRP jackets, with fibers horizontal, perpendicular to the column axis to address deficiencies in the amount or detailing of the transverse reinforcement, work just as well as steel jackets. Although their material cost is higher than that of steel, the handling, installation and maintenance of FRP jackets are much easier.

Prior to 1971, California bridge piers typically used minimal transverse reinforcement consisting of 13 mm (#4) ties or hoops spaced at 300 mm (12 in). This reinforcement was independent of longitudinal reinforcement, column size, or seismic demands. Furthermore, short laps of the column hoop reinforcements in the cover concrete and 90° L-shaped corner hooks for rectangular column ties (present ACI Code requires 135° hooks) contributed to premature column failure, which occurred as soon as the cover concrete spalled under seismic attack. Failure could be one or a combination of the following modes (Seible, Priestley and Innamorato 1995, included in this volume):

1- **shear failure** manifested sequentially by inclined cracking, cover concrete spalling, rupture of the transverse reinforcement, buckling of the longitudinal reinforcement, and finally disintegration (at times explosive) of the column core. To insure against this failure mode, the shear capacity of columns needs to be checked both in the end regions or potential plastic hinge regions, where the concrete shear capacity can degrade with increasing ductility demand, and the central region between flexural plastic and/or existing built-in column hinges.

2- **confinement failure** of the flexural plastic hinge region, manifested sequentially by flexural cracking, crushing and spalling of the cover concrete, buckling of the longitudinal reinforcement, and finally compression failure of the column core. These failures, which occur after some inelastic displacement, are limited to a small portion of the column and are thus more desirable than the shear failure mode. This desired ductile flexural plastic hinging at the column ends can be achieved by added confinement through external jacketing in the case of existing columns.

3- **lap splice debonding** which occurs at the base of the column, a region of maximum flexural demand, where the column longitudinal reinforcement is lap-spliced with the starter bars that extend from the footing. Lap splice debonding occurs once vertical cracks develop in the cover concrete and progresses with increased dilatation and cover concrete spalling.

None of the above failure modes can be viewed separately, since retrofitting for one deficiency may only shift the seismic problem to another location or failure mode, without necessarily improving the overall deformation capacity. For example, a shear critical column strengthened over the column center region with composite wraps is expected to develop flexural plastic hinges at the column ends, which in turn need to be designed and retrofitted for the desired confinement levels. Furthermore, lap splice regions need not only be checked for the required clamping force to develop the capacity of the longitudinal column reinforcement, but also for confinement and ductility of the flexural plastic hinge.

2.1.3 DESIGN PROCEDURES

Based on extensive research at UCSD, Caltrans has developed design guidelines for the seismic retrofit of reinforced concrete (RC) bridge columns. The UCSD research, presented in the present volume in a paper by Seible, Priestley and Innamorato, covers strengthening for shear, flexural hinge confinement, lap splice clamping, and apply to circular and rectangular columns limited to certain aspect ratios. The Caltrans guidelines, in the form of a memorandum to designers, are also presented in this volume in an appendix to Roberts's paper. It is likely that the Caltrans design guidelines will form an important part of the American Association of State, Highway and Transportation Officials (AASHTO) Committee T21 *Standards for Highway Bridge Rehabilitation.*

As the use of FRP composites for structural rehabilitation expands from bridges to buildings, the question arises as to whether the technology developed for highway bridges can be adapted directly to building applications. More than likely, changes will need to be made, e.g., on issues of constructibility, axial load levels and slab continuity. ACI Committee 440 is working on *Guidelines for Selection, Design and Installation of Fiber Reinforced Polymers (FRP) Systems for Externally Strengthening Concrete Structures.* These guidelines will apply to buildings as well as transportation structures.

Beside resistance to earthquake loads, there are other reasons for strengthening with FRP. They include strengthening of industrial, offshore, military and other installations against blast; repair of structures deteriorated by exposure to the environment; upgrading to higher service load requirements; and provision of extra protection against water infiltration. There is a need for guidelines for such rehabilitation, e.g., where there is a severe loss in cross-section due to corrosion.

2.1.4 MATERIAL PROPERTIES AND RESISTANCE FACTORS

Most material tests used for Caltrans job qualification are based on ASTM Standards that were developed originally for FRP applications in the aerospace industry. There is still disagreement about the appropriateness of some of these tests (e.g., tensile test of a straight coupon versus a ring test) or how to interpret the results (e.g., two different ASTM test methods give two different glass transition temperatures for the same resin). ASTM Committees D20 and D30 are working on adapting composite material testing standards to civil engineering applications.

Other noteworthy efforts concerning material properties and resistance factors have more to do with FRP structural members than with FRP repair of RC structures. They include the American Society of Civil Engineers (ASCE) and the Pultrusion Industry Council (PIC) of the Society of Plastics Industry (SPI) *Prestandards for Structural Design of Pultruded Structural Products* and the European Structural Polymeric Composites (EUROCOMP) *Design Code and Handbook* (1996). The approach taken in these two references is that resistance factors, as in Load Resistance Factor Design (LRFD), need to be determined not just for materials, but also for the entire building system.

To help achieve a consensus on resistance factors, it would be useful to have a repository for material and structural rehabilitation test and field data. This would be an ongoing project, a database constantly updated and available to the research and design communities. The working group suggested that NIST undertake such a project.

The working group recommended that NIST work with AASHTO, ASTM, ACI and ASCE to provide the technical bases to develop national standards on design procedures, materials tests and resistance factors. The group also encouraged NIST to develop a comprehensive *Handbook on Structural Repair with FRP* similar to the EUROCOMP *Design Code and Handbook* (1996).

Durability and fire resistance are two sets of material properties of special interest to the participants. They are discussed in the next sections.

2.1.5 DURABILITY

Durability is of prime economic importance and is frequently invoked by FRP manufacturers and designers as a justification and selling point in their argument to replace corroding steel. Although FRP materials are not all new, their application to infrastructure is relatively recent and issues of durability are frequently raised by owners and regulating agencies. Aerospace experience, where durability is often expressed in hundreds of hours of flight, might not be directly translated into the decades of exposure required by civil engineering applications because of differences in quality control in manufacturing and installation, among others. It is also not clear how to correlate laboratory tests (e.g., immersion in an alkaline solution) with actual field exposure (e.g., contact with concrete). Accelerated aging must also be calibrated against real time measurements.

There has been relatively little research on resistance to freeze-thaw cycles, and more data are needed. A good example of such work is provided by Soudki and Green (1996) who tested the effectiveness of carbon fiber reinforced polymer (CFRP) wraps in strengthening and increasing the ductility of RC columns under room temperature, cold temperature (-18°C), freeze-thaw cycles (-18°C to +20°C) or water immersion. Their results showed that:

1- CFRP wraps were effective in improving the strength, stiffness and ductility of concrete columns. CFRP wraps could restore the strength of columns damaged by freezing and thawing to that of unwrapped columns at room temperature. CFRP-wrapped columns exposed to freeze-thaw cycles showed a significant increase in strength (up to three times) compared with unwrapped columns exposed to the same conditions. The ductility also improved by a factor of five. A second layer of wrap provided an extra 15 % in strength.

2- Low temperature exposure and water immersion did not affect the strength significantly but affected the failure mode. Low temperature increased the brittleness of the wrap, which failed in a manner similar to the specimens subjected to freeze-thaw: the wraps suddenly broke off in the form of series of broken hoops. The concrete columns, though cracked, remained intact. Submerged columns failed "in shear through the sheet along the height of the column."

3- For comparison, at room temperature, one layer of wrap increased the strength by 20 %, two layers by 30 %.

There is also a need to research the performance of FRP retrofits in retarding corrosion; and their performance after continued corrosion of the steel reinforcement, which could cause dilatation of the bars, cracking and further deterioration of the concrete. Some structures have been rehabilitated with FRP composites between five and ten years ago, and they could be examined to establish a database for durability under actual field conditions.

2.1.6 FIRE RESISTANCE

Fire resistance is of interest as the use of FRP for structural rehabilitation expands to the building market after proving itself in highway bridges. Of special concern is the performance of FRP near its glass transition temperature and its residual structural strength after exposure to high temperatures. Working group participants mentioned applications where they felt uncomfortable with how close temperatures on a sunny summer afternoon came to the glass transition temperature of the resin. They also related numerous instances where the major impediment to an FRP application was the building fire permit.

As with other material properties, there is a need for standard test methods and a national database, so designers and manufacturers do not have to repeat fire tests to convince individual owners. It might be useful to test the fire resistance of the RC-FRP system and not just the individual FRP components. Since NIST has an active fire research program, and most universities do not, the working group recommended that NIST play a leading role in this area.

2.1.7 QUALITY CONTROL

Since structural repair is typically a field operation, quality control is of particular concern. The FRP themselves are of high strength, but the quality of the concrete substrate, the surface preparation and the bond between FRP and concrete can be weak links. It is desirable to have an economical means to detect incomplete adhesion between FRP wraps or between wrap and concrete by non-destructive means, e.g., by infra-red thermography (see the paper by Hawkins, Johnson and Nokes). There is also a need to have good control of the amount of fibers used (presently ensured by measuring wrap thickness in-situ) and correct statistical sampling of field measurements.

2.1.8 NONDESTRUCTIVE EVALUATION (NDE) METHODS

Development of NDE methods to control the quality of field installation and to monitor performance over time is highly desirable. The successful methods would be fast, inexpensive and easy to operate. Infra-red thermography and ultra-sound techniques appear promising. As design standards are being developed and durability data collected, these NDE methods can be used to monitor structural performance and provide owners with a margin of comfort. The same purpose can be achieved by in-situ load testing, as presented by Gold and Nanni in this volume.

NDE techniques could probably be used also to study the interfaces between fiber and resin, composite and concrete, and successive layers of composite wraps. These interfaces may very well hold the key to durability and quality control issues. They need to be studied further.

2.1.9 RECOMMENDATIONS

The recommendations from the working group are summarized below. For NIST:

- to work with AASHTO, ASTM, ACI and ASCE to provide the technical bases to develop national standards on design procedures, materials tests and resistance factors.
- to develop a comprehensive *Handbook on Structural Repair with FRP* similar in scope to the EUROCOMP *Design Code and Handbook* (1996).
- to play a leading role in testing the fire resistance of RC-FRP systems and developing performance standards for them.
- to develop and maintain a database on material properties and structural performance both in the laboratory and in the field.

For the FRP research community in general:

- to generate more durability test data, especially concerning accelerated aging; freeze-thaw cycling; exposure to alkaline environment; moisture absorption; etc.
- to develop better ways to control quality during field installations.
- to develop NDE techniques for quality control and structural monitoring.

2.2 WORKING GROUP ON BEAMS AND SLABS

Participants: Craig Ballinger, Edward Fyfe (Co-chair), Hota GangaRao, John Gross (Secretary), Steven Morton, Antonio Nanni (Chair), Fred Policelli, Gary Steckel, Benjamin Tang.

2.2.1 INTRODUCTION

The use of FRP composites for the rehabilitation of beams and slabs started about ten years ago with some pioneering research performed at EMPA (Swiss Federal Laboratories for Materials Testing and Research) in Switzerland. Most of the work focused on timber and reinforced concrete structures, although some steel structures have been renovated with FRP as well. The high material cost of FRP might be a deterrent to its use, but at closer look, FRP can be quite competitive. Carbon fibers now cost about 35 times as much as steel, on a mass basis. However, they are five times lighter and six times stronger than steel, so in fact, for the same structural purpose, the weight of carbon required can be 30 times less than its steel equivalent. This light weight also provides considerable cost saving in terms of labor: a worker can handle the FRP material, whereas a crane would be required for its steel equivalent. FRP strips and fabrics come in great lengths, which can be cut to size in the field, as compared with welding of steel plates. FRP strips or fabric are thin, light and flexible enough to be slid behind pipes, electrical cables, etc., further facilitating installation. With heat curing, epoxy can reach its design strength in a matter of hours, resulting in rapid bonding of FRP to the structure and consequently, minimum disruption to its use.

FRP composites are used in the repair of beams and slabs as external tensile reinforcement. As such, they increase the strength (ultimate limit state) and the stiffness (serviceability limit state) of the structure. Thus, FRP repair is motivated by requirements for earthquake strengthening, higher service loads, smaller deflections, or simply to substitute for deteriorated steel reinforcement. The increase in strength and stiffness is sometimes realized at the expense of a loss in ductility, or capacity of the structure to deflect inelastically while holding a load close to its capacity.

A number of issues still impede the routine use of FRP as a structural repair material. Chief among them is the absence of a long record of use, causing concern about durability with potential users. Another concern is fire resistance, especially as rehabilitation with FRP expands from highway bridges to buildings. The absence of standards is also an impediment, but this is being remedied by efforts such as this workshop and by organizations such as ACI. At the time of this writing, Committee 440 has produced a draft *"Guidelines for Selection, Design and Installation of Fiber Reinforced Polymer (FRP) Systems for Externally Strengthening Concrete Structures"*. This is a substantial effort, but it is a living document and some issues still need further research.

As in the previous section, this summary of the workshop discussion has been supplemented with current publications to make it more complete and readable.

2.2.2 FLEXURE

The design of FRP external reinforcement for flexure is fairly rational and straightforward. It is based on Bernoulli's hypothesis of strain compatibility that plane sections remain plane, which requires perfect bond between FRP and concrete. Some European manufacturers and designers are at variance with ACI 318 and recommend against using the rectangular (Whitney) stress block for concrete at compression failure strain levels. This particular practice is being revised to penetrate the U.S. market.

2.2.3 DUCTILITY

Ductility is a desirable structural property because it allows stress redistribution and provides warning of impending failure. Steel-reinforced concrete beams are under-reinforced by design, so that failure is initiated by yielding of the steel reinforcement, followed, after considerable deformation at no substantial loss of load carrying capacity, by concrete crushing and ultimate failure. This mode of failure is ductile and is guaranteed by designing the tensile reinforcement ratio to be substantially below (ACI requires at least 25 % below) the balanced ratio, which is the ratio at which steel yielding and concrete crushing occur simultaneously. The reinforcement ratio thus provides a metric for ductility.

In a beam reinforced internally with steel and externally with FRP, there is substantial reserve capacity at steel yielding. Failure is precipitated by FRP debonding, rupturing, or concrete crushing. All of these modes of failure are brittle, i.e., load capacity is reached with little inelastic deformation (Fig. 1). Here, load keeps increasing, albeit at a lower rate (with respect to deflections) than prior to steel yielding, and the FRP maintains elastic behavior until failure occurs suddenly.

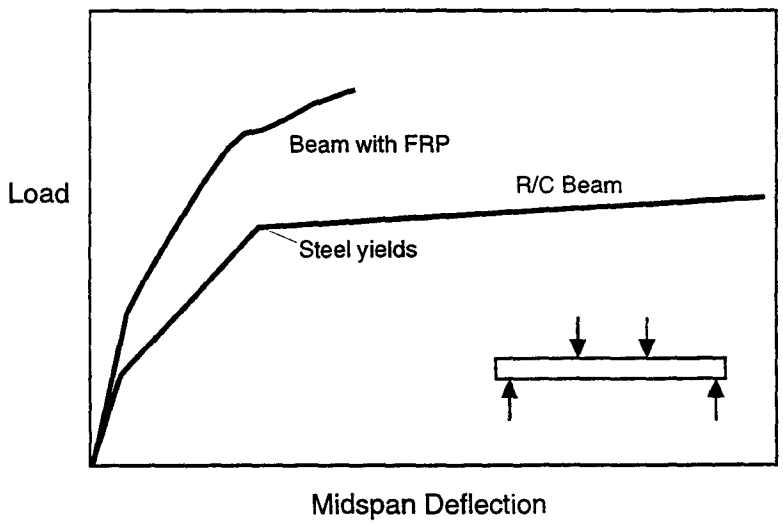

Fig. 1— *Schematic load versus midspan deflection behavior for reinforced concrete beam and beam strengthened with externally applied FRP*

One of the issues raised in the workshop, and which the participants felt needed more research, was how to design repair for a ductile failure. The presence of two tensile materials, steel and FRP, provides a warning when high loads are attained and steel begins to yield. At that point, in general, the FRP is only slightly stressed, but stiffness decreases and deflections increase sharply. If this stage is to be interpreted as a warning of impending failure, then the reserve capacity beyond steel yielding should not be too great. It would therefore seem prudent to design the repair so that the capacity of the repaired beam does not exceed the double of the original.

Clearly, a new measure of ductility is required. Some proposed measures of ductility are deflection, curvature (in the form of ratio of compression depth to section depth) and strain energy (area under load deflection curve). A ductility index could be defined based on the ratio of such measures at failure to their values at some earlier stages, such as yielding of steel, end of concrete linear range, or a given ratio of midspan deflection to span.

Although failure initiated by concrete crushing is considered brittle in steel-reinforced concrete beams, it is the preferred mode for FRP strengthened beams, because the alternative, tensile rupture of the FRP strips, is even more brittle.

2.2.4 PRESTRESSED CONCRETE

The majority of published research on the use of FRP for flexural repair of concrete beams deal with reinforced concrete (RC) rather than prestressed concrete (PC). Whatever the reason - - less benefit, greater difficulty in performing the research, a reluctance to combine passive and prestressed reinforcements -- more research on this topic is called for.

Some researchers have investigated the use of prestressed FRP strips for external strengthening. One of the simplest ways of doing so is to relieve some of the dead load by jacking prior to repair. When the jacks are released, the FRP composites are under tension (prestress), prior to the application of any live load. As expected, deflections are lower than if the FRP composites were not prestressed. Behavior can be predicted by the usual rational analysis of flexure (plane sections remain plane). Some other researchers have tried to prestress the FRP composites themselves prior to affixing them to the concrete. Handling and anchorage are difficult, and the benefits in terms of lower deflections and higher strength do not justify the technique.

Whether the FRP composites are prestressed or not, proper analysis of the behavior of the repaired beam requires accounting for the stresses present prior to the repair. Research indicates that the presence of narrow cracks prior to repair does not have a great influence on ultimate strength. However, wide cracks cause debonding of FRP laminates to occur at these locations and may precipitate failure, unless special anchorages are provided.

2.2.5 ANCHORAGE

Debonding or anchorage failure occurs in the majority of tests of beams strengthened for flexure (64 % according to a survey by Bonacci 1996). In only 22 % of the tests surveyed, rupture of the FRP was achieved, with the rest of the beams failing in shear or compression. It is not unusual for a carbon strip to debond at strains about half of its ultimate strain, oftentimes due to weakness in the substrate rather than the epoxy. In order to achieve a more efficient use of this expensive material, more research on anchorage, development length and measurement of bond stress is called for, e.g., on the use of anchor bolts, U-shaped straps near the laminate cut-off, and staggered cut-off of multi-layer laminates. Some of the design formulas currently recommended are based on development lengths of steel plates and may not be appropriate. It is also not clear that, given the non-uniform bond stress distribution in anchorages, any development length beyond a certain maximum would be beneficial.

High shear is usually present near supports and further complicates external strengthening of zones of high negative moments in continuous beams, which is hampered, in most cases, by the inaccessibility of the tension face. More research is needed here.

2.2.6 SHEAR

External shear strengthening has received less research attention than flexure. However, this deficiency is being corrected with some comprehensive efforts at the University of Alberta and the University of Missouri-Rolla, among others. The principal difficulty resides in proper anchorage. To be effective, shear reinforcement must be capable of intercepting all diagonal shear cracks and developing sufficient tensile strength across these cracks. As cracks cross the depth of the beam, this tensile strength must be capable of being developed everywhere over the depth of the beam. For steel stirrups,anchorage is provided by hooks, bends or overlap at both ends.

By wrapping FRP sheets or straps on the sides and around the bottom of a beam, after properly rounding off corners to eliminate sharp edges, proper anchorage is provided on one end of the FRP stirrups. Anchorage at the upper end is problematic, due to the presence of floor slabs. Extending the FRP laminates onto the bottom of the slab is unsatisfactory, because tension would cause peeling off the reentrant corner (Fig. 2). Some researchers advocate anchoring by piercing through the slab, but this may not be practical.

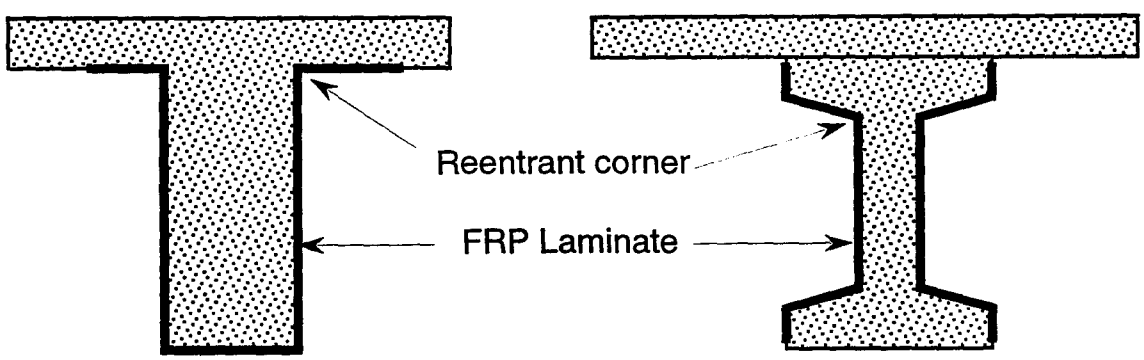

Fig. 2—*External shear strengthening of T- and I-beams*

Difficulty in anchorage causes FRP stirrups to debond at a stress far less than ultimate. This could be accounted for by an efficiency factor less than one. The same approach can be used for flexural strengthening, where the problem is less severe.

Research is needed over a wide range of testing variables. Research on the use of continuous fabric, as opposed to finite strips, presents no conceptual difficulty. Shear resistance can be visualized as a diagonal compression field provided by concrete on which is superposed a diagonal tension field supplied by the continuous FRP. Spacing requirement for FRP strips is similar to the requirement that spacing of steel stirrups be less than a certain maximum which depends on the anticipated shear load.

Another variable is the orientation of the fibers. Limited research results indicate that ± 45° plies are slightly more efficient than 0° - 90° plies in resisting shear. Some researchers have also varied the length of coverage, i.e., FRP would cover the sides of a beam only, and not even to full depth. This practice can only be justified if it is impractical to wrap around the bottom of the beam, or if haunches prevent full depth coverage.

2.2.7 FATIGUE

Fatigue resistance is an important long term property of FRP, especially when it is used in highway bridges. Research data are scarce, and more is needed. Findings to date in Japan and Europe indicate that fatigue is not a problem for CFRP reinforcement. In Japanese tests conducted with maximum stresses of less than 87 % of the short term tensile strength and magnitude of up to 1000 MPa (145 ksi), more than 4×10^6 load cycles were attained (Uomoto, Nishimura and Ohga 1995). For external strengthening, the level of service stresses is not expected to exceed 20 % of ultimate, and so fatigue of carbon fibers is not a concern. Tests at EMPA in Switzerland confirm that the fatigue resistance of CFRP is excellent.

Fiber-glass reinforcement also exhibits high fatigue strength, although less than carbon fibers. Tests of glass fiber rods intended for prestressing at a maximum stress of 500 MPa (72 ksi) and a stress range of 345 MPa (50 ksi) showed that they can withstand more than 4×10^6 load cycles before failure initiated at the anchorage zones (Franke 1981).

2.2.8 CREEP RUPTURE

Creep rupture (failure under sustained stress) is a major concern when FRP composites are subjected to long term loading. Important variables are fiber type (with glass fibers having a lower creep-rupture time than carbon), stress level and temperature.

German tests (Budelman and Rostasy 1993) indicate that creep rupture does not occur for glass FRP (GFRP) if sustained stress is limited to 60 % of the short-term strength. Since the level of service stress for external strengthening is usually much less than that, it would appear, according to this research, that there is no problem with creep rupture of GFRP.

Based on tests conducted at room temperature (Dolan et al. 1997, Ando et al. 1997, Yamaguchi et al. 1997, Seki et al. 1997), conservative recommendations have been made to limit the level of sustained stress for FRP rods and for loads not exceeding 50 years in duration to 30 % of ultimate for GFRP, 50 % for Aramid FRP (AFRP) and 80 % for carbon FRP (CFRP). These limits are conservative and more tests are required, not only to measure the time to creep-rupture but also the magnitude of creep strain.

2.2.9 OTHER RESEARCH ISSUES

Multiple Plies: Multiple layers of FRP fabric are sometimes used, and due care is required to ensure that the resin wets through all layers and has sufficient strength to transfer the shear force between layers. Even then, there is a loss of effectiveness of multiple plies compared with the strength of a single ply multiplied by the number of layers, due to shear lag. Research is needed to provide an effectiveness factor for multiple plies.

Protective Coating: Fire resistance is a concern as the use of FRP for external reinforcement expands from bridges to buildings. One possible solution is the use of protective coatings, such as intumescent coatings, for fire protection. Coatings for ultra-violet radiation protection may also be required for FRP. In regions of high traffic, and where the risk of collision is high, coatings to protect against abrasion and impact are also desirable.

2.2.10 SUMMARY OF RESEARCH NEEDS

More research is needed in the following areas:

- Ductility of beams strengthened for flexure with FRP.
- Strengthening of beams in zones of negative moment and high shear.
- Strengthening of beams for shear.
- Anchorage, both for flexure and shear.
- Strengthening of prestressed concrete beams.
- Creep strain and creep rupture, especially for GFRP and AFRP.
- Effectiveness of multi-ply FRP.
- Protective coating against fire, UV radiation, abrasion and impact.

2.3 WORKING GROUP ON WALLS

Participants: Oscar Barton (Secretary), Mohammad Ehsani (Co-chair), Gary Hawkins, Fred Isley, Vistasp Karbhari, Gloria Ma, Orange Marshall (Chair).

2.3.1 INTRODUCTION

Walls are essential components of buildings, not only for their obvious architectural functions of visual and sound barriers and defining rooms, but also for important structural reasons. These include resisting their own dead weight and that of parts of the building above (by in-plane compression), and resisting lateral loads caused by wind, blast or earthquakes (by a combination of in-plane shear, in-plane and out-of-plane bending- see Fig. 3). In buildings more than 30 stories high, walls are imperative and contribute significantly to the strength, stiffness and ductility of these buildings in resisting lateral loads (Paulay and Priestley 1992).

Of interest to this working group are reinforced concrete walls and masonry walls, reinforced or not. Unreinforced masonry (URM) walls have been used since the dawn of civilization and are present in many historical structures. Typically, older brick walls do not meet modern seismic standards and need retrofit (in the early 1970s, the building code requirements for lateral resistance of newly designed masonry buildings were increased by as much as 50 %).

In the U.S., there is a huge inventory of URM walls exposed to potential earthquake or blast. URM walls may very well represent the largest market for structural strengthening, which traditionally include the following methods:

- adding framing elements such as steel beams and columns;
- adding reinforcement by inserting vertical steel rods into the wall cavities and grouting them in place;
- and adding a layer of shotcrete or ferrocement reinforced with a steel mesh on one or both wall faces.

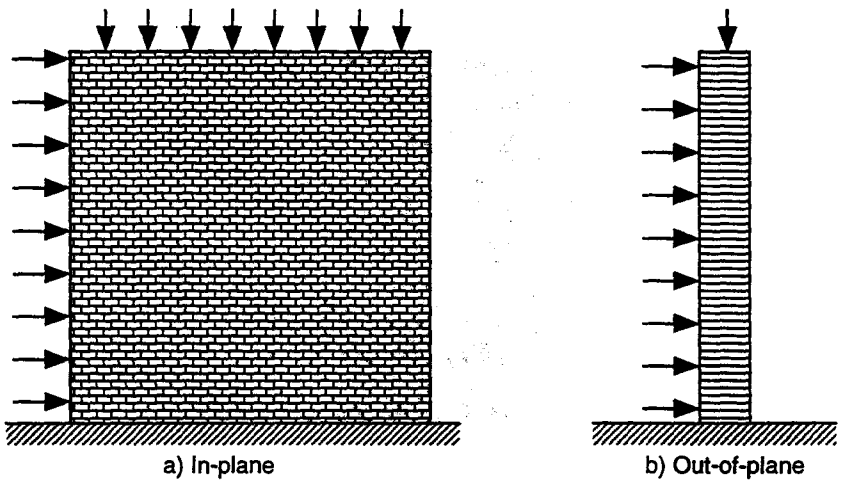

Fig. 3—In-plane and out-of-plane loading of wall

These methods add significantly to the mass of a building, causing more inertial forces in an earthquake and often necessitating strengthening of the foundation. Moreover, retrofit by these methods causes major disruption to the building functions. It is no surprise, therefore, that fiber-reinforced composites are attractive in strengthening and repair applications thanks to their low mass and ease of application. FRP sheets or straps a few millimeters thick can be installed rapidly without removing pipes or cables. They can improve strength, stiffness and ductility dramatically, yet do not add much mass.

As in the previous sections, this summary of the workshop discussion has been supplemented with current literature for completeness and readability. Although there has been less research on the use of FRP composites in the retrofit of walls than of beams and columns, much progress has been achieved in understanding the basic mechanics and establishing design guidelines. Major outstanding issues include fire resistance and anchorage. (Anchorage difficulties are also encountered in the reinforcing of walls with steel rods.)

2.3.2 DESIGN METHODS

The principal source of energy dissipation in a well designed, steel reinforced, laterally loaded cantilever wall is the yielding of the flexural reinforcement in the plastic hinge region, normally at the base of the wall. Failure modes to be prevented are those due to diagonal tension or diagonal compression due to shear, instability of thin-walled sections or of the compression reinforcement, sliding shear along construction joints and shear or bond failure along lapped splices or anchorages. For FRP reinforced walls, the modes of structural action are similar and include the combined effects of axial load and out-of-plane bending, in-plane bending, or in-plane shear.

For both out-of-plane and in-plane bending, the concept of balanced strain reinforcement ratio, similar to that of beams, can be used for FRP-strengthened walls: it is the tensile reinforcement ratio at which masonry crushing and FRP rupture occur simultaneously. The balanced strain reinforcement ratio depends on the axial load, the dimensions of the wall and the material properties of the masonry and the FRP. The moment capacity of walls is a function of the reinforcement ratio and the compression depth (Triantafillou 1998).

Since FRP composites act as tensile reinforcement, their effectiveness decreases with an increase in axial compression and is negligible for axial loads exceeding 25 % of the compressive strength of the unreinforced wall in the case of out-of-plane bending. For lower values of axial compression, the higher the stiffness of the FRP reinforcement, the more effective it is in increasing the moment capacity (Triantafillou 1998). It should be noted that, while the FRP is applied at zero stress, the wall is already under axial compression.

As a mechanism to resist in-plane lateral loads, bending predominates in slender walls (with high ratios of height to length) and shear predominates in squat walls (with low aspect ratios). If FRP reinforcement for in-plane bending takes the form of vertical strips, then only half of the strips are stressed in tension, and they are most effective when placed farthest from the neutral axis.

Relationships similar to out-of-plane bending have been derived. They show that the moment capacity increases linearly with the reinforcement ratio and the FRP reinforcement is effective at all practical levels of axial loads (i.e., the influence of axial force on moment capacity is weak) (Triantafillou 1998).

In-plane shear in masonry is similar to that in reinforced concrete: shear resistance is the sum of an uncracked masonry term and a reinforcement term based on a truss model. According to Triantafillou (1998), vertical FRP strips are ineffective against in-plane shear because of weak dowel effect. However, even a small amount of horizontal FRP composites can increase shear resistance considerably. Detailed design equations concerning coverage methods (sheet or strips) and spacing requirements of the strips still need to be developed.

Most of what is known about masonry walls covers single, or at most double-wythe walls. In the case of multi-wythe walls, especially with internal cavities, bonding of FRP sheets to the external surfaces only may not be effective. It may be necessary to fill the cavities with a low density material, such as polyurethane or isocyanurate foam, or introduce transverse rods to ensure adequate shear transfer between wythes. For strengthening against earthquake and blast, the dynamic and energy absorbing properties of FRP need further investigation.

2.3.3 BOND AND ANCHORAGE

The performance of FRP composites depends greatly on the quality of the bond to the masonry surface. The external reinforcement may not be able to conform to the "high relief" or textured surface of masonry walls. A deeply raked or deteriorating mortar joint may pose problems. Repointing of the joints with a comparable mortar is recommended before affixing the FRP composites (Christensen, Gilstrap and Dolan 1998). Quantitative methods for assessing the residual strength of a wall, its surface condition, and the required surface preparation are needed.

Effective strengthening is only possible if peeling of the laminate does not occur, i.e., sufficient development length and anchorage (e.g., clamping) are provided. One of the earliest tests of strengthening of walls with FRP composites shows clearly the importance of anchorage. A 2.0 m × 3.6 m masonry wall was strengthened with carbon fiber sheets bonded to the wall and anchored to the adjoining concrete slabs above and below it. Ductility increased by 360 % compared with the unreinforced wall. A similar wall, reinforced over its entire surface with a polyester sheet which was not anchored to the adjoining slabs, only exhibited an increase in ductility of 36 % (Schwegler 1994).

Equations have been proposed to predict peak shear and normal stresses in the anchorage zones (Triantafillou 1998). Design equations, in the form of development length, still need to be worked out. In general,development of these design equations require extensive experimental research , which still remains to be done. Practical methods of anchoring FRP strips and sheets need to be developed for various geometries and loads.

2.3.4 MOISTURE

Because absorption of moisture by cross-linked polymers can reduce their strength by 25 % to 30 % and may result in microcracking of the adhesive and delamination, it is important to allow the structure to "breathe", i.e., moisture vapor to escape. Thus, open-weave fabric is preferable to close-weave, although the application of the polymer matrix resin reduces considerably the actual size of the openings. For the same reason, tapes or straps are preferable to continuous fabric. A continuous horizontal tape located at the base of a wall should be avoided if rising dampness is a problem (Christensen, Gilstrap and Dolan 1998).

Trapped moisture may go through cycles of freezing and thawing, and as liquid water expands 9 % upon freezing, this process can be especially damaging in porous materials, such as masonry, leading to cracking, spalling and eventual disintegration. Moisture has an even more adverse effect on bond, when it acts in conjunction with high temperatures. For these reasons, some manufacturers recommend that moisture content in the substrate be less than 4 % for optimal use of their adhesive resins. This is not a stringent requirement, as soft bricks have a moisture content of about 1 % of volume in 40 % relative humidity (Christensen, Gilstrap and Dolan 1998).

2.3.5 FIRE RESISTANCE

Polymeric materials are organic in nature and are all flammable to one degree or another. However, building codes have found the use of these materials in buildings acceptable in at least two instances: one is the use of plastic foam insulation, either within the cavity or on the outer face of an exterior wall, provided the interior of the building is separated from the foam insulation by an approved thermal barrier. Composite fibers and resins have fire and smoke properties similar to those of plastic foam insulation, and the masonry wall could serve as the thermal barrier (Christensen, Gilstrap and Dolan 1998). The use of FRP composites on the exterior faces of walls should therefore be acceptable.

The second instance of the use of plastic in commercial buildings is in tensioned membrane structures, which are typically glass fibers with a Teflon coating. Tensioned membrane roofs are routinely approved for various occupancy types (Christensen, Gilstrap and Dolan 1998).

An important test for the fire safety of building materials is the Standard Test Method for Surface Burning Characteristics of Building Materials ASTM E 84 (UL 723, NEPA 255 and UBC 42-1 are similar). This test evaluates flame spread and smoke developed over a 10 minute fire exposure. Building materials are limited to a maximum flame spread index of 25 (with red oak as 100 on this scale) and a maximum smoke developed of 450. For the two examples mentioned above, plastic foam insulation has indices of flame spread of 5 and smoke developed of 165. The manufacturer of the membrane roof of a recently completed major U.S. international airport claims a maximum flame spread and smoke contribution of 10 for its product. Another data point is provided for an epoxy (used in FRP structural repair) that produces maximum flame spread and smoke developed of 5 (Christensen, Gilstrap and Dolan 1998).

As far as toxicity of combustion products is concerned, FRP are in the "normal range". Kevlar[1] produces combustion gases similar to those of wool: carbon dioxide, water and oxides of nitrogen. Unfortunately, the combustion of Kevlar[1] may also produce carbon monoxide, hydrogen cyanide and other toxic gases (Christensen, Gilstrap and Dolan 1998).

High temperatures can be a problem, even in the absence of fire. Surface temperatures of masonry can reach 60 °C (140 °F), and darker surfaces can reach 70 °C (165 °F) or higher in warm climates. For comparison, an epoxy used with CFRP has a glass transition temperature (at which it begins to soften) of 53 °C (128 °F) (Christensen, Gilstrap and Dolan 1998).

Although the above discussion focuses on walls, some of the concerns for the fire resistance of FRP apply to RC beams and columns as well. More research is needed on the behavior at high temperatures of FRP composites bonded to concrete or masonry substrates. This will help in obtaining the acceptance of these materials by building code officials.

2.3.6 OTHER ISSUES

- size effect in testing: Is there a size effect, and if so, how to account for it in tests? This issue is common to beams, columns and walls, but is probably more acute in walls because of the higher costs of wall tests, and the size of bricks or masonry blocks being the same in full or reduced scale tests.
- UV protection: Concern for fire protection and the emission of toxic combustion gases would encourage the use of FRP on the external faces of walls. Protection against ultraviolet radiation may therefore be necessary, especially for Aramid fibers, which may otherwise discolor in the short term and lose strength in the long term. Various coatings may be necessary for architectural reasons as well.

2.3.7 SUMMARY OF RESEARCH NEEDS

Although much progress has been achieved, more research is needed:
- to develop design methods on the use of FRP to strengthen wall elements, especially to ensure ductile behavior and proper anchorage.
- to improve fire resistance and to provide data to encourage adoption of FRP by building codes.

The workshop participants agreed that it would be useful to collect test results from universities such as Arizona, California Irvine, California San Diego, Georgia Tech, SUNY Buffalo, Iowa State, California State Long Beach, Wyoming, Missouri-Rolla, etc. for a critical review of the state of the art.

---

[1] Trade or manufacture's names appear herein because they are essential to the objectives of this document. The United States Government does not endorse products or manufacturers.

2.4 OVERALL SUMMARY AND CONCLUSIONS

A number of recurrent themes are common in the discussions of the three working groups. They are:

- **Design methods and standards:** In order of progress of the state of the art, retrofit of columns is the most complete, followed by beams, and lastly, walls.
- **Bond and anchorage:** Proper bond of the FRP composites to the concrete or masonry substrate is crucial to their efficient performance. Correct assessment of the quality of the surfaces to be repaired, and good control of the quality of field installation are desirable.
- **Design for ductility:** This is especially important due to the brittle nature of FRP composites, concrete and masonry.
- **Fire resistance:** This is important for the expansion of the use of FRP composites from highway bridges to buildings.
- **Material safety (knock-down) factors:** The data base for such factors is limited, yet they are crucial for a safe and economical design.

The workshop participants encouraged NIST to be active in resolving all these issues, to serve as a national research resource and repository of data on the use of FRP composites in infrastructure.

2.5 REFERENCES

Al-Saidy, A., Ehsani, M. R., and Saadatmanesh, H. (1996), "Strengthening of URM Walls for Direct Shear," 2nd Int. Conf. on Advanced Composite Materials in Bridges and Structures, Montreal, Québec, Canada, Aug., pp. 605-612

Ando, N., Matsukawa, H., Hattari, A. and Mashima, A. (1997), "Experimental Studies on the Long-Term Tensile Properties of FRP Tendons," Proceedings of the Third International Symposium, Japan Concrete Institute, Sapporo, Japan, Volume 2, pp. 203-210.

Arduini, M. and Nanni, A. (1997), "Behavior of Precracked RC Beams Strengthened with FRP Carbon Sheets," ASCE J. of Composites for Construction, Vo. 1, No. 2, May, pp.. 63-70.

Bonacci, J.F. (1996), "Strength, Failure Mode and Deformability of Concrete Beams Strengthened Externally with Advanced Composites," Proceedings of the 2nd International Symposium on Advanced Composite Materials in Bridges and Structures, Montreal, Canada, pp. 419-426.

Budelman, H. and Rostasy, F.S. (1993), "Creep-Rupture Behavior of FRP Elements for Prestressed Concrete - Phenomenon, Results and Forecast Models," Proceedings, ACI International Symposium on FRP Reinforcements for Concrete Structures, Vancouver, March, ACI-SP 138, pp. 87-100

Christensen, J.B., Gilstrap, J. and Dolan, C.W. (1998), "Composite Materials Reinforcement of Existing Masonry Walls," J. of Architectural Engg., V. 2, No. 2, June, pp. 63-70.

Dolan, C.W., Lau, B., and Hundley, A. (1997), "Creep-Rupture of Fiber-Reinforced Plastics in a Concrete Environment," Proceedings of the Third International Symposium, Japan Concrete Institute, Sapporo, Japan, Volume 2, pp. 187-194.

Ehsani, M. R., Saadatmanesh, H., and Al-Saidy, A. (1997), "Shear Behavior of URM Retrofitted With FRP Overlays," ASCE Journal of Composites for Construction, February, pp. 17-25.

Franke, L. (1981), "Behavior and Design of High-Quality Glass-Fiber Composite Rods as Reinforcement for Prestressed Concrete Structures," Report, International Symposium, CP/ Ricem/I BK, Prague, 52 pp.

Fyfe, E.R. (1994), "New Concepts for Wrapping Columns with a High Strength Fiber/Epoxy System," Proc. ASCE Engg. Mat. Conf., pp. 1156-1162.

Gilstrap, J.M. and Dolan, C.W. (1998), "Out-of-Plane Bending of FRP-Reinforced Masonry Walls," Composites Science and Technology, V. 58, pp. 1277-1284.

Karbhari, V. and Seible, F. (1999), "Design Considerations for the Use of Fiber Reinforced Polymeric Composites in the Rehabilitation of Structures," Proceedings, NIST Workshop on Standards Development for the Use of Fiber Reinforced Polymers for the Rehabilitation of Concrete and Masonry Structures, January 7-8, 1998, Tucson, Arizona (this volume).

Mc Ghee, K.K. and Gomez, J.P. (1996), "State of the Art of Advanced Materials in Transportation Structures," Virginia Transportation Research Council 97-R8, Nov.

Paulay, T. and Priestley, M.J.N. (1992), *Seismic Design of Reinforced Concrete and Masonry Buildings,* Wiley-Interscience, New York, 744 pp.

Priestley, M.J.N., Seible, F. And Calvi, G.M. (1996), *Seismic Design and Retrofit of Bridges*, Wiley-Interscience, New York, 1996, Section 8.2.

Roberts, J.E. (1997), "Application of Composites in California Bridges," Proc. ASCE 15th Structures Congress, *Building to Last*, Apr. 1997, pp. 56-66.

Seible, F., Priestley, M.J.N., and Innamorato (1995), "Earthquake Retrofit of Bridge Columns with continuous Carbon Fiber Jackets," University of California San Diego, Report No. ACTT-95/08, Vol. II, Design Guidelines.

Seki, H., Sekijima, K. and Konno, T. (1997), "Test Method on Creep of Continuous Fiber-Reinforcing Materials," Proceedings of the Third International Symposium, Japan Concrete Institute, Sapporo, Japan, Volume 2, pp. 195-202.

Soudki, K.A. and Green, M.F. (1996), "Performance of CFRP Retrofitted Concrete Columns at Low Temperatures," Second International Conference on Advanced Composite Materials in Bridges and Structures, Montreal, Québec, Canada, Aug., pp. 427-434.

Schwegler, G. (1994), "Masonry Construction Strengthened with Fiber Composites in Seismically Endangered Zones," Tenth European Conference on Earthquake Engineering, Vienna, Austria, Vol. 1.

Triantafillou, T. C. (1998), "Strengthening of Masonry Structures Using Epoxy-bonded FRP Laminates," ASCE Journal of Composites for Construction, Vol. 2, No. 2, May, pp. 96-104.

Uomoto, T., Nishimura, T., Ohga, H. (1995), "Static and Fatigue Strength of FRP Rods for Concrete Reinforcement," Non-metallic (FRP) Reinforcement for Concrete Structures. Proceedings of the Second International RILEM Symposium (FRPCS-2), Ghent, August, pp. 100-107.

CHAPTER 3

INVITED PAPERS

APPLICATION OF COMPOSITES IN CALIFORNIA BRIDGES QUALITY CONTROL SPECIFICATIONS AND TESTING PROGRAM

JAMES E. ROBERTS, P.E., M. ACI, F. ASCE
Director, Engineering Services and Chief Engineer, Structures
Engineering Service Center, California Department of Transportation
P.O. Box 942874, MS 9, Sacramento, California, 94274-0001

ABSTRACT

The California Department of Transportation has been engaged in cooperative research with the University of California at San Diego for the past six years to develop field applications of advanced composite materials for both repair of older structures and construction of new bridges.

The most highly developed application to date is the use of advanced composites in the repair of bridge columns and other supporting elements to improve their ductility for seismic resistance. Both epoxy impregnated fiberglass and carbon fiber materials have been tested in the laboratory on half-scale models of bridge columns to determine the ductility that can be achieved in an older, non-ductile concrete column. The tests have confirmed the viability of these materials for strengthening existing structures and field application quality specifications have been developed. Since March 1996 these specifications have been published and included as alternatives in over 50 % of the seismic retrofit strengthening contracts advertised for construction.

The more exciting application of advanced composites is for new bridges and bridge deck replacement units. The research conducted so far has resulted in the design of a highway bridge composed of 0.9 m (3 foot) diameter carbon fiber tubular bridge girders and a fully advanced composite bridge deck. Development of these elements has been underway for three years and laboratory testing is currently underway. The bridge design will be utilized on two state highway bridges in Southern California, to be advertised for construction in November 1998. Further development of bridge deck replacement elements composed of advanced composite materials is continuing, with emphasis now on the connection details.

Although these advanced composite materials are expensive, their long life expectancy and resistance to corrosion makes them competitive if the life cycle cost of a bridge in a highly corrosive environment is considered.

Future plans in the Caltrans-UC San Diego-ARPA-FHWA cooperative research program include the construction of a fully composite vehicle bridge on the UCSD campus which will cross over Interstate 5 north of San Diego. Construction of smaller bridges is a preliminary step in the development and testing of the various components which will be utilized on this larger bridge.

1. Introduction

Following the October 1989 Loma Prieta earthquake, the California Department of Transportation (Caltrans), in cooperation with the University of California at San Diego (UCSD), began a research program to develop techniques for utilizing epoxy impregnated fiberglass sheets to wrap around older, non-ductile concrete bridge columns as an alternative to the already proven steel jacket technique. The jackets provide sufficient confinement in the concrete to allow the columns to perform in a ductile manner under seismic loading. It was known that Japanese researchers had used high strength carbon strands to similarly reinforce industrial stacks and chimneys but glass fiber sheeting had not been used. The major unknown was the durability of the fiberglass materials under cyclic loading and the level of ductility to which the columns could be designed. The testing program was conducted under the same conditions that were used in the testing of steel plate jackets. Half scale models of the prototype bridge columns were constructed, wrapped with the desired layers of glass fiber sheets and tested through several cycles of loading at various levels of ductility until the column failed due to degradation of its hysteretic performance. These laboratory tests proved that the columns wrapped with epoxy impregnated fiberglass could perform with nearly the same level of ductility as the columns jacketed with steel plates.

Material properties are readily available from the manufacturers but the issue of adequate quality control specifications for field application remains. These early applications were rather crude, being hand laid in a manner similar to hanging wallpaper. Several months were required to fully develop adequate quality control (QC) specifications so the materials tested in the laboratory could be replicated with confidence in the field. The use of epoxy impregnated fiber glass has been approved for two column wrap systems and field applications have been in place for over five years.

In 1993, following the end of the cold war and reduction of major aerospace and defense applications, the advanced composites industry began looking for applications of advanced composites in the civil infrastructure. The Caltrans-UCSD testing program was expanded to develop similar applications for the higher strength carbon fibers. This testing program has continued as more manufacturers submit their materials for approval and there are at least five systems approved for field application in California at this time. The carbon fibers are applied by automatic wrapping machines which wrap several 6 mm (1/4 in) strands simultaneously and can fully wrap a typical 1.2 m to 1.8 m (4 ft to 6 ft) diameter, 6 m (20 ft) long bridge column in two hours. Because of the higher strength to weight ratio these materials are very competitive with the steel shell retrofit technique, and they can be applied with much less heavy lifting equipment. The materials are much more resistant to corrosion than the steel jackets and they will require very little maintenance.

Working in cooperation with the University of California at San Diego research team and the ARPA (advanced Research Projects Agency) and FHWA (Federal Highways Administration) technology transfer programs, we have been testing other applications of advanced composites in the seismic reinforcing of older bridges and in the construction of major bridge components and ultimately, a complete highway bridge designed for AASHTO (American Association of State,

Highway and Transportation Officials) loads. The first applications involve resin impregnated fiberglass or carbon sheets on noncircular bridge members. These include the use of sheets to wrap and confine the spandrel columns and rib members on several arch bridges where it is difficult to access the locations with heavy equipment. The second application involves the use of small diameter carbon fiber tubes, constructed with the same technology as rocket bodies, for bridge girders. This application has been tested at the laboratory and design details are being developed for a bridge on the state highway system in southern California. The bridge will include deck units which are composed entirely of advanced composite materials and construction is scheduled for late fall of 1997. The testing program for these bridge components has been underway at UC San Diego for over three years, under the ARPA grant.

2. Material Testing Program

The major concerns associated with the implementation of advanced composite materials into the civil infrastructure are long term durability and consistency in the field applications. It is imperative to be able to consistently replicate in the field the laboratory performance. To ensure the necessary quality control, Caltrans, in conjunction with the Aerospace Corporation of El Segundo, California, has developed a comprehensive testing program for the evaluation of advanced composite materials for seismic retrofit and rehabilitation of structures.

The Caltrans program was set up to identify the critical parameters and procedures which need to be monitored or controlled to ensure the reliable performance of composite retrofitted columns or bridge decks. Cost considerations are an important part of this program. It would be very easy to define tests, inspections, and quality checks that would increase the price of manufacturing composite jackets to the point where they would not be cost competitive with conventional materials. Because of the variations in composites, some testing is unavoidable. However, this program is designed to minimize the testing required to ensure a quality product.

2.1 Program Overview

The Caltrans program primarily focuses on two areas of applications:

1 - Seismic retrofit of bridges.
2 - Bridge strengthening and rehabilitation methods.

To ensure a sound objective technical evaluation, Caltrans is cooperating with several agencies which possess viable technologies, knowledge and tools to conduct a comprehensive assessment of the various systems under consideration. This cooperative effort is being facilitated by the Society for the Advancement of Material and Process Engineering (SAMPE). Material testing is being performed by the Aerospace Corporation (El Segundo, California). Structural testing is being conducted at the University of California at Irvine (UCI).

2.2 Program Objectives

Qualifying well documented composites materials and processes for structural applications is the ultimate goal of the Caltrans effort. In order to achieve such level of confidence, the Caltrans program is set to accomplish the following objectives:

1 - Identify acceptable material testing methods appropriate for each material type (Carbon fiber, E-Glass, S-Glass, Aramid) and consistent with intended applications. This item includes identifying environmental and physical factors that must be addressed. This objective has been accomplished through the pre-qualification document.

2 - Identify and/or develop structural testing methods to verify shear, confinement and flexural strength of the composite system. The goal is to develop test methods that are simple and inexpensive, yet capable of demonstrating the structural performance of a given system. This objective has been accomplished.

3 - Develop analytical and modeling techniques appropriate for the intended application. Such analysis should take into account the interaction between the composite material and the structure. Dr. Frieder Seible of UC San Diego has produced design guidelines for column strengthening, based on his extensive research and testing program (Appendix 3.1a). Work in this area is in progress to develop design guidelines for other applications.

4 - Establish performance criteria for the various materials.

5 - Develop standard specifications and necessary special provisions for viable systems. These specifications should address material types, manufacturing process, mixing and curing, quality control, quality assurance and application methods. Where applicable, ASTM tests will be identified and used. Several projects have been advertised already. Field Quality Control Specifications were developed for those contracts.

6 -Develop and adopt design guidelines taking into account environmental and physical factors. Current design guidelines incorporate an environmental factor of safety. This factor will be re-examined at the conclusion of the program for any possible adjustment. In addition to the column strengthening design guidelines produced by Dr. Seible, the SIKA Corporation has produced design guidelines for Carbon Strip Repair of Concrete Bridges.

2.3 Design Issues And Durability Concerns

Caltrans' experience in composites research, trial field demonstrations, as well as through numerous meetings with the industry, revealed a myriad of issues that should be addressed by any public agency. Listed below are issues that must be verified by the engineer of record prior to using composites in infrastructure applications:

- Product documentation consistent with application;
- Process Control;

- Material Selection Criteria;
- Material physical properties;
- Long term durability (chemical and physical) testing of the composite against:
    - Moisture;
    - Alkali attack;
    - High/low temperature extremes;
    - Other;
    - Salt attack;
    - Ozone;
    - Ultra violet radiation;
- Quality control in manufacturing, mixing and installation;
- Fiber content, voids, resin ratio;
- Design guidelines for the specific composite;
- Safety factors;
- Damage and failure modes;
- Adequate specifications;
- Repeatability and consistency;
- Acceptable field erection methods;
- Effect of fatigue on bond behavior;
- Performance under dynamic load;
- Testing under sustained loading;
- Qualifications of suppliers and product designers;
- Cure temperature;
- Transportation, handling and
- Maintenance issues.

Our experience has also revealed crucial issues that are unique to each fiber, resin, and equally important, the manufacturing process and application method. Composites material testing which was conducted by various research institutions show sensitivity to certain environmental factors and possible strength degradation. These results should not necessarily eliminate the use of composites in infrastructure; they merely underscore the need to properly select all components of the composite to suit applications and performance requirements. These results further show the need for safety factors larger than those used for conventional construction materials.

In addition to column retrofit concepts, some manufacturers have tested upgrading structural members, such as beams and slabs, using carbon fiber. However, only empirical data was generated, with no significant design or durability guidelines. Even though the industry is rich in data related to aerospace and marine applications, the data we need, relevant to civil engineering infrastructure applications, is very limited.

2.4 Material Testing

Caltrans issued its pre-qualification requirements in April 1996 and later amended such requirements in January 1997. During the same period, Caltrans issued its Memo to Designers, which states the conditions under which composite alternatives may be used. To help industry participants qualify, Caltrans is carrying out this program for qualifying composite jackets for seismic retrofit of bridge columns. The Aerospace Corporation is supporting Caltrans in the

qualification program and is performing environmental durability qualification tests. Degradation of mechanical and physical properties of composite panels is being determined following exposure to various environmental conditions for periods up to 10,000 hours. Environmental exposures include 100 % humidity at 38 °C (100°F), immersion in salt water, immersion in an alkali solution, ultraviolet light, dry heat at 60 °C (140 °F), a freeze/thaw test, and immersion in diesel fuel. The effects of the environmental exposures are being quantified by measurements of the composite panel mass, tensile modulus, strength, and failure strain, interlaminar shear strength, and glass transition temperature. Property measurements are being made after exposure intervals of 1 000 hours, 3 000 hours and 10 000 hours to allow estimates of degradation over the projected service life. As of December 1996, property testing following the 1 000 hours and 3 000 hours exposure periods has been completed for three glass fiber/polymer resin systems and for four carbon fiber/polymer resin systems.

2.5 Structural Testing

All composite column casing systems are required to satisfy reduced scale cyclic column testing requirements to verify the casing constructibility and effectiveness as a seismic retrofit measure. To qualify a system as an alternative column casing for seismic retrofit, a minimum of two types of retrofit enhancements must be demonstrated and tested in accordance with Caltrans requirements. Test results must satisfy Caltrans requirements relative to ductility performance, shear strength, and flexural enhancement. For each shape, cyclic tests must be conducted to demonstrate the performance of both retrofit enhancements and corresponding unretrofitted "As-Built". Manufacturers may elect to qualify only one shape (circular or rectangular) by satisfying all test requirements for either the circular tests or rectangular tests, thus limiting their qualifications to these systems.

For each geometrical shape, and for each corresponding enhancement, a minimum of one retrofitted "As-Built" column and one unretrofitted column shall be built and tested. For example, to qualify a system for circular column retrofit applications, the following four test specimens must be constructed and tested:

1. Circular Shear As-Built Column (Unretrofitted);
2. Circular Lap Splice As-Built Column (Unretrofitted);
3. Circular Shear Retrofitted Column subjected to double bending load;
4. Circular Lap Splice Retrofitted Column subjected to single bending load.

All column details must conform to Caltrans requirements. Retrofit jacket thickness (or fiber ratio) must comply with the current Caltrans design criteria, with proper scaling factors when applicable, and shall satisfy the following:

1. Minimum confinement stress of 2.1 MPa (300 psi) in the lap splice and/or plastic hinge zone;
2. Maximum material strain of 0.001 in the lap splice zone and 0.004 in the plastic hinge zone;
3. Minimum confinement stress of 1.0 MPa (150 psi) and material strain of 0.004 must be maintained elsewhere in the column with appropriate transition; and

4. Minimum displacement ductility for the retrofitted column of 8 to 12 is to be expected. An expected concrete strength of 34 MPa (5 000 psi) at the time of testing and Grade 60 reinforcing steel shall be used, although Grade 40 is preferable when available.

2.6 Summary Of Program Tasks

The following briefly summarizes tasks that are used to develop the information necessary to qualify vendors to wrap bridge columns with composites for the purpose of seismic retrofitting. All of the data will be cataloged and the program will be managed under one of the tasks. The proposed work includes an analysis of a variety of designs, materials and application techniques to determine the internal stresses in the composite and the strength of the jacket. Two of the tasks involve extensive testing of the composite materials, to fill holes in the database and, using materials from previously wrapped test columns, determine the effect of weathering/aging. Techniques and specifications will be defined under the quality assurance task to guarantee that the vendor's products are consistent and of sufficient quality to fulfill their function. Under the nondestructive evaluation task, techniques will be developed to verify the quality of the jacket as well as the health of the concrete itself.

Task 1:	**Analytical Design Verification - Modeling**
Objective:	Conduct analytical modeling of selected sub-scale tests and estimate a critical flaw size. Help develop a simplified guide for designing composite jackets.
Deliverable:	Internal stress analysis of selected sub-scale tests and critical flaw size estimation.
Task 2:	**Composite Properties Characterization**
Objective:	Develop specific requirements for manufacturing and testing composite jackets. Identify limits (e.g., temperature and humidity) allowed during manufacture.
Deliverables:	List of recommended test methods. Recommend manufacturing methods and placards.
Task 3:	**Reduced Scale Test Column Verification**
Objective:	Determine the quality of the wraps on the test specimens and the resolution of the nondestructive testing techniques.
Deliverables:	Nondestructive evaluation maps of selected sub-scale columns both before and after testing. Comparison of test results to analytical models.
Task 4:	**Quality Assurance**
Objective:	Establish the basis for a plan to ensure that composite retrofitted columns uniformly meet established performance requirements defined by Caltrans.
Deliverables:	Define standard test procedures for incoming inspection and witness specimens. Specify/define minimum requirements for quality testing, e.g., number of witness specimens required.

Task 5:	**Nondestructive Evaluation (NDE)**
Objective:	Finalize and document column assessment techniques
Deliverables:	Document the most effective NDE techniques. Demonstrate techniques on sub-scale columns.
Task 6:	**System Evaluation**
Objective:	Develop a manufacturing model to compare total costs of composite jackets with steel jackets.
Deliverables:	Estimation of labor and material costs for composite jackets and steel jackets. Life cycle cost estimates.
Task 7:	**Database Organization and Project Management**
Objective:	Collect, assimilate, and store the generated data into a database. Manage tasks 1 through 6.
Deliverables:	Management, schedule and cost reports Database generated by this and related programs including: material properties, NDE methods, manufacturing specifications, processes and model studies.

Preliminary results are now available and are published in a report by Steckel of Aerospace Corporation and Sultan of Caltrans (1997). More complete results will be available during the winter of 1997-98.

3. Field Application Quality Control Specifications

Caltrans has developed preliminary construction specifications to ensure quality control for the field applications of advanced composite materials. Separate specifications are available for the various materials but they are generic enough to allow the various vendors of each material to bid, assuming they have passed the qualification tests. These documents have been developed over the past seven years to achieve a process for field application that can be replicated by reasonably skilled construction workers. Design guidelines are also available for determining the proper thickness of materials. Both documents are appended to this report.

4. Summary

Caltrans has embarked on a program to utilize the advanced composite materials in seismic retrofit strengthening of bridge columns and other structural members. The goal is to increase the shear capacity and develop ductile performance in these members during a seismic event. It seems obvious that, in the current United States economy, these composite materials are not competitive with the more common bridge materials now being used, unless accurate life cycle costs are considered. The advantages of these advanced composite materials are known from the testing and field applications to date. In the process, some of the obstacles to be overcome have also been identified. These programs across the nation and especially the California program are designed to implement the use of these materials into the bridge and highway infrastructure as research and good engineering practice permit.

References

1. California Department of Transportation, Draft Special Provisions-Section 10-1. Alternative Column Casing, June 1997

2. Priestley, M.J.N., Seible, F., and Calvi, G.M., "Seismic Design and Retrofit of Bridges" John Wiley & Sons, 1996, 686 pp.

3. Seible, F., "Advanced Composites for Bridge Infrastructure Rehabilitation and Renewal" International Conference on Composite Construction, Innsbruck, September 1997

4. Steckel, G.L., and Sultan, M., "Evaluating Advanced Composites For Application In Transportation Structures-A Program Overview" Second FHWA/Caltrans National Seismic Conference, Sacramento, CA, July 1997

APPENDIX 3.1A

UCSD RESEARCH

In conformance with NIST policy, SI versions of unit-dependent equations have been added to the original report.

ADVANCED COMPOSITES
TECHNOLOGY TRANSFER
CONSORTIUM

Report No.
ACTT–95/08

EARTHQUAKE RETROFIT OF BRIDGE COLUMNS WITH CONTINUOUS CARBON FIBER JACKETS

— Volume II, Design Guidelines —

by

Frieder Seible
M.J. Nigel Priestley
Donato Innamorato

Report to Caltrans, Division of Structures, prepared under the ARPA/TRP Program Agreement No. MDA 972-94-3-0030.

August 1995

Structural Engineering
University of California, San Diego
La Jolla, California

Advanced Composites
Technology Transfer Consortium

Report No. ACTT—95/08

EARTHQUAKE RETROFIT OF BRIDGE COLUMNS WITH CONTINUOUS CARBON FIBER JACKETS

— Volume II, Design Guidelines —

by

Frieder Seible[1]

M.J. Nigel Priestley[2]

Donato Lnnamorato[2]

[1]Professor of Structural Engineering

[2]Assistant Development Engineer

Report to Caltrans, Division of Structures, prepared under the

ARPA/TRP Program Agreement No. MDA 972-94-3-0030.

Structural Systems Research
University of California, San Diego
La Jolla, California 92093-0085

TABLE OF CONTENTS

1. INTRODUCTION 3-15

2. SHEAR STRENGTH RETROFIT 3-17

   2.1 Shear Mechanism 3-17

   2.2 Carbon Jacket Shear Retrofit 3-19

   2.3 Shear Retrofit Design 3-19

3. FLEXURAL PLASTIC HINGE CONFINEMENT 3-20

   3.1 Flexural Plastic Hinge Mechanism 3-20

   3.2 Rectangular Columns 3-23

   3.3 Design of Flexural Confinement Retrofits 3-24

4. CLAMPING OF LAP SPLICES 3-25

   4.1 Lap Splice Failure Mechanism 3-25

   4.2 Lap Splice Clamping Design 3-26

5. SUMMARY AND CONCLUSIONS 3-27

6. REFERENCES 3-27

1. INTRODUCTION

Recent earthquakes such as Whittier 1987, Loma Prieta 1989, and Northridge 1994, have demonstrated the vulnerability of older reinforced concrete bridge columns to fail under the imposed seismic deformation demands. Particularly vulnerable are bridge piers designed prior to the 1971 San Fernando earthquake since before that time the transverse or horizontal column reinforcement was only nominally provided, typically #4 bars (D 13 mm) placed 300 mm (12 in) on center, independent of column size, strength, or deformation demands. Even after 1971, substandard transverse reinforcement amounts and inadequate seismic reinforcement detailing can be encountered in some of the existing reinforced concrete bridge columns.

The functions of the transverse reinforcement are (1) to provide shear capacity to columns where principal tensile stresses cause inclined cracking, (2) to confine potential flexural plastic hinge regions for increased concrete deformation capacity and for lateral support to the longitudinal column reinforcement subsequent to cover concrete spalling, and (3) to clamp lap splices in the longitudinal column reinforcement. To fulfill these requirements, transverse reinforcement amounts can be calculated and designed based on established principles. Appropriate seismic detailing in the form of anchorage in the column core, welded hoops, or continuous spiral reinforcement will ensure functionality of this transverse reinforcement even subsequent to cover concrete spalling.

In existing reinforced concrete bridge columns where insufficient transverse reinforcement and/or seismic derailing are provided, three different types of failure modes can be observed under seismic load/deformation input.

The first and most critical failure mode is column shear failure (Fig. 1), where inclined cracking, cover concrete spalling and rupture or opening of the transverse reinforcement can lead to brittle or explosive column failures. The failure sequence consists of (1) the development of inclined cracks once the tensile strength of the concrete is exceeded, (2) the opening of inclined or diagonal cracks in the column and onset of cover concrete spalling, (3) rupture or opening of the transverse or horizontal reinforcement, (4) buckling of the longitudinal column reinforcement, and (5) disintegration of the column concrete core. While new column designs feature engineered and better detailed transverse or shear reinforcement, the shear strength of existing substandard columns can be enhanced by providing external shear reinforcement or strength to the column through carbon fiber wraps in the hoop direction. The shear capacity of columns needs to be checked both in the column end regions or potential plastic hinge regions and in the column center portion between flexural plastic and/or existing built-in column hinges.

The second column failure mode consists of a confinement failure of the flexural plastic hinge region (Fig. 2), where subsequent to flexural cracking, cover concrete crushing, and spalling, buckling of the longitudinal reinforcement, or compression failure of the core concrete initiate plastic hinge deterioration, associated with a shortening of the column in the plastic hinge zone. Plastic hinge failures typically occur with some displacement ductility, and are limited to shorter regions in the column. Thus, these failures are less destructive and, because of their large inelastic flexural deformations, are more desirable than the brittle column shear failures of the entire column as described above. This desired ductile flexural plastic hinging at the column ends can be achieved through added confinement in the form of increased hoop or transverse reinforcement in new and

external jacketing in existing columns. The confinement objective is to prevent cover concrete spalling, to provide lateral support of the longitudinal reinforcement, and to enhance concrete strength and deformation capacities. All of these characteristics apply along the entire column perimeter and thus uniform confinement provided by circular hoops or a circular external jackets would be most beneficial. In rectangular columns, either a circular or oval jacket can provide confinement along the entire column perimeter while rectangular jackets effectively only provide inward corner forces, and significant jacket thickness needs to be provided between corners to restrain lateral dilation and column bar buckling. However, large scale tests (Fig. 3) have shown that appropriately designed rectangular carbon jackets can provide sufficient confinement and bar buckling restraint to achieve high flexural displacement ductility levels.

Finally, some existing bridge columns feature lap splices in the column reinforcement, which for ease of construction are located at the lower column end to form the connection between the footing and the column. Starter bars for the column reinforcement are placed during the footing construction and lapped with the longitudinal column reinforcement in this region of maximum column moment demand, i.e., the potential plastic hinge region. While the confinement concepts discussed above for plastic hinge regions also apply to lap-spliced column ends, the flexural strength of the column can only be developed and maintained when debonding of the reinforcement lap splice is prevented. Lap splice debonding occurs once vertical micro cracks develop in the cover concrete and debonding gets progressively worse with increased vertical cracking and cover concrete spalling, (Fig. 4). This flexural capacity degradation can occur rapidly at low flexural ductilities in cases where short lap splices are present and little confinement is provided, but can also occur more gradually with increased lap length and confinement. Confinement can again be provided by external jacketing or winding with continuous carbon fibers, where jackets with convex curvature are again more advantageous to provide continuous lateral clamping pressures to the column bar lap splices along the entire column perimeter

None of the above failure modes and associated column retrofits can be viewed separately since retrofitting for one deficiency may only shift the seismic problem to another location and failure mode, without necessarily improving the overall deformation capacity. For example, a shear critical column strengthened over the column center region with carbon wraps is expected to develop flexural plastic hinges at the column ends, which in turn need to be designed and retrofitted for the desired confinement levels. Furthermore, lap splice regions need not only be checked for the required clamping force to develop the capacity of the longitudinal column reinforcement, but also for confinement and ductility of the flexural plastic hinge.

Based on the different failure mechanisms discussed above different column regions which will require different jacket designs can be identified, as shown in Figs. 5 and 6, where L_s = lap splice length, L_{c1} = primary confinement region for plastic hinge, L_{c2} = secondary confinement region adjacent to plastic hinge, L_v = shear strengthening region, L_v^i = shear retrofit inside the plastic hinge zone and L_v^o = shear retrofit outside the plastic hinge zone. The secondary confinement region is necessary to prevent flexural plastic hinging above the primary plastic hinge zone when confinement allows for significant overstrength development in the primary plastic hinge. Plastic hinge confinement lengths L_{c1} and L_{c2} are tied to the column geometry based on the expected plastic hinge length both in terms of column depth or diameter in the loading direction, and to the shear span or distance from the column hinge to the point of contraflexure. The lap splice length L_s is directly

defined by the lap length of the starter and column bars and the shear length L_v is taken as the remaining region between the previously defined end zones. In order to avoid direct contact between thick column end jackets and the adjacent bridge footing or cap-beam. a gap is designed to allow plastic hinge rotation without added strength or stiffness from longitudinal jacket action. For thin carbon jackets wound directly onto the original column geometry, this gap can be very small, i.e., less than 25 mm (1 in), whereas in cases where concrete bolsters are added to convert column cross-sections to circular or oval shapes, gaps of 50 mm (2 in) or more can be required to prevent contact between the retrofit and the adjacent bent portions.

Since the principal deficiency in existing pre-1971 bridge columns is in the amount and detailing of the transverse reinforcement, the automated continuous carbon fiber wrap system addresses this deficiency by wrapping prepreg 12K carbon tows in the horizontal or 90° direction to the column axis, to provide the required transverse confinement, clamping and buckling restraints. Anchorage of the wound carbon tows is ensured by the continuity of the fiber wrap for the entire column jacket and lay-up thicknesses can be closely controlled and monitored with an automated winding system.

The key mechanical properties of the carbon jacket system, to provide confinement, clamping and buckling restraints, are the elastic jacket modulus E_j in the hoop direction, the ultimate unidirectional tensile strength f_{ju} and the ultimate unidirectional tension failure strain ε_{ju}. Since essentially linear elastic mechanical characteristics can be assumed for the unidirectional composite fiber wrap, two of the three characteristic properties are sufficient for the jacket design. The design guidelines outlined in the following can be applied to other composite fiber jacket systems with different material characteristics. However, appropriate reduction factors to the mechanical characteristics need to be defined for durability, non-uniformity in lay-up in case non-automated systems are used, non-continuous fibers or jacket joints in the hoop direction, and for systems where ambient curing rather than controlled curing environments are used.

2. SHEAR STRENGTH RETROFIT

2.1 Shear Mechanism

Many different models exist to describe the complex transfer of so called "shear forces" in a reinforced concrete member. A simple and rational model which seems to fit the experimental data best was put forward in [1] and assumes a combination of three different mechanisms to contribute to the nominal shear capacity V_n in the form:

$$V_n = V_c + V_s + V_p \tag{1}$$

where V_c = the concrete contribution provided primarily in the form of aggregate interlock, which decreases with increasing crack width and flexural ductility, V_s = the horizontal reinforcing steel contribution as part of an assumed truss mechanism, and V_p = the horizontal component from the applied axial load compression strut between the column ends.

Due to the aggregate interlock degradation with increasing crack width or flexural ductility, the V_c components needs to be tied to the column displacement ductility level μ_Δ in regions where

inelastic flexural plastic hinging occurs. Thus, the concrete contribution to the shear resistance needs to be assessed both inside the plastic hinge region L_c (Figs. 5 and 6) as V_c^i and outside the plastic hinge region over L_v (Figs. 5 and 6) as V_c^o. Thus

$$\text{a)}\quad \frac{V_c'}{N} = 0.083k\sqrt{\frac{f_c'}{MPa}}\frac{A_e}{mm^2} \quad \text{or} \quad \frac{V_c'}{lbs} = k\sqrt{\frac{f_c'}{psi}}\frac{A_e}{in^2}$$

$$\text{b)}\quad \frac{V_c'}{N} = 0.25\sqrt{\frac{f_c'}{MPa}}\frac{A_e}{mm^2} \quad \text{or} \quad \frac{V_c'}{lbs} = 3\sqrt{\frac{f_c'}{psi}}\frac{A_e}{in^2} \tag{2}$$

where the effective concrete shear transfer area $A_e = 0.8\ A_g$ or 80 % of the gross column area, and k is a strength reduction factor based on the column displacement ductility μ_Δ in the form of

$$\begin{array}{ll} k = 3 & \text{for } \mu_\Delta < 2 \\ k = 5 - \mu_\Delta & \text{for } 2 \le \mu_\Delta < 4 \\ k = 1.5 - \mu_\Delta / 8 & \text{for } 4 \le \mu_\Delta < 8 \\ k = 0.5 & \text{for } \mu_\Delta \ge 8, \end{array} \tag{3}$$

a design relationship put forward in [2] for unidirectional ductility, which can also be graphically expressed as shown in Fig. 7. Note that Eq. (3) is for shear design and is thus slightly more conservative than concrete shear reductions proposed for assessment of expected capacities in existing columns (Fig. 7).

The horizontal reinforcing steel contribution V_s can be determined as

$$\text{a)}\quad V_s = \frac{\pi}{2}\frac{A_h f_{hy} D'}{s}\cot\theta \quad \text{(circular)}$$

$$\text{b)}\quad V_s = \frac{n A_h f_{hy} D'}{s}\cot\theta \quad \text{(rectangular)} \tag{4}$$

where A_h = the area of one leg of the horizontal reinforcement, n = the number of legs of horizontal column ties in the loading direction, f_{hy} = the yield strength of the horizontal reinforcement, s = the spacing of the horizontal reinforcement or the spiral pitch, θ = the angle of the principal compression strut to the column axis or the shear crack inclination, and D' = the core column dimension in the loading direction from center to center of the peripheral horizontal reinforcement (Fig. 8). Conservatively, $\theta = 45°$ or $\cot\theta = 1$ can be assumed for design, or more accurately, for assessment, principal compression strut inclinations of 30° can be assumed for bridge columns and 45° for pier walls.

The axial load shear contribution is simply defined as the horizontal component of the inclined compression strut:

$$V_p = P\tan\alpha \tag{5}$$

where P represents the axial load at the column top and α the compression strut inclination or angle with the vertical column axis. This tan α can be defined as

$$\text{a)} \quad \frac{D-c}{2L} \qquad \text{(for single bending)}$$

$$\text{b)} \quad \frac{D-c}{L} \qquad \text{(for double bending)}$$

where c represents the distance between the neutral axis and the extreme compression fiber, D the column dimension in the loading direction, and L the clear column height, as depicted in Fig. 9.

2.2 Carbon Jacket Shear Retrofit

Carbon jackets of thickness t_j contribute an additional or fourth term to the shear resistance mechanism outlined in Eq. (1) in the form

$$\begin{aligned} &\text{a)} \quad V_j = \frac{\pi}{2} f_{jd} t_j D \cot\theta \quad \text{(circular)} \\ &\text{b)} \quad V_j = 2 f_{jd} t_j D \cot\theta \quad \text{(rectangular)} \end{aligned} \tag{6}$$

where t_j = the carbon jacket thickness, f_{jd} = the design stress level in the jacket, and D = the column dimension in the loading direction. Again, conservatively, a 45° force transfer mechanism, or cot θ = 1 can be assumed for the jacket design.

While Eq. (6) clearly indicates that the jacket contribution depends on the jacket stress, a stress level less than the ultimate capacity f_{ju} is assumed to limit the horizontal column dilation. Tests at UCSD [1,5] have shown that, when the column dilation exceeds 0.4 % to 0.5 % in the loading direction, the concrete contribution to the shear capacity degrades rapidly, thus a strain limit rather than a strength limit needs to be employed for the jacket design. A strain limit of ε_{jd} = 0.4 % is a conservative design value, which is well below the ultimate strain limit of ≈ 1 % for the carbon jacket but higher than the yield strain of the horizontal column reinforcement which will ensure that the column reinforcement shear contribution in Eq. (4) will be fully activated. Thus, in Eq. (6)

$$f_{jd} = 0.004\, E_j \tag{7}$$

should be used for the composite jacket shear design.

2.3 Shear Retrofit Design

The carbon jacket shear retrofit design can be summarized as follows. The shear design demand originates, based on capacity design principles, from the plastic column shear or the shear at full overstrength V_0. With a shear strength reduction factor ϕ = 0.85 the column shear design requires that

$$V_n = V_c + V_s + V_p + V_j \geq \frac{V_o}{\phi} \tag{8}$$

Unless more reliable actual plastic shear information is available, V_o can be conservatively estimated as 1.5 V_{yi} or 1.5 times the ideal shear capacity of the column at ductility $\mu_\Delta = 1$, or

$$V_j \geq \frac{V_o}{\phi} - (V_c + V_s + V_p) \tag{9}$$

For circular columns the jacket thickness t_j can be determined as

$$t_j = \frac{\frac{V_o}{\phi} - (V_c + V_s + V_p)}{\frac{\pi}{2} 0.004 E_j D} = \frac{159}{E_j D}\left[\frac{V_o}{\phi} - (V_c + V_s + V_p)\right] \tag{10}$$

and for rectangular columns

$$t_j = \frac{\frac{V_o}{\phi} - (V_c + V_s + V_p)}{2 \times 0.004 E_j D} = \frac{125}{E_j D}\left[\frac{V_o}{\phi} - (V_c + V_s + V_p)\right] \tag{11}$$

Since the concrete shear contribution V is different inside the plastic hinge confinement region (L_c) and outside (L_v), two jacket thicknesses for shear have to be derived and provided over the regions L_v^i and L_v^o in Figs. 5 and 6, respectively. To avoid shear problems within and in direct vicinity to the flexural plastic hinge, the shear retrofit length L_v^i should be extended to $L_v^i = 1.5$ D or one and a half times the column dimension in the loading direction measured from the point of maximum moment.

3. FLEXURAL PLASTIC HINGE CONFINEMENT

3.1 Flexural Plastic Hinge Mechanism for Circular Columns

Confinement of flexural plastic hinge regions in columns is required to enhance the ultimate compression strain of the concrete and with it, the inelastic rotation capacity of the hinge, as well as to support the longitudinal reinforcement against lateral buckling.

To confine a flexural plastic hinge region in a circular column for standard design ductilities a volumetric reinforcement ratio of

$$\rho_s = \frac{k_s f_c'}{f_{yh}}\left[0.5 + 1.25\frac{P}{f_c' A_g}\right] + 0.13(\rho_\lambda - 0.01) \tag{12}$$

is required based on [2, 3] in the plastic hinge zone. Equation (12) depends on ρ_ℓ = the longitudinal column reinforcement ratio A/A_g and on a factor k_s which is calibrated with experimental results based on an energy balance approach which compares the vertical strain energy stored in the

confined concrete at crushing with the strain energy stored provided by the horizontal hoop reinforcement up to bar rupture. For mild steel reinforcement hoops, $k_s = 0.16$ is applied [2, 3].

For carbon fiber jackets Eq. (12) can be interpreted as

$$\rho_j = \frac{4t_j}{D} = \frac{k_j f_c'}{f_{ju}}\left[0.5 + 1.25\frac{P}{f_c' A_g}\right] + 0.13(\rho_\lambda - 0.01) \tag{13}$$

Based on energy considerations as outlined above, the characteristic hoop reinforcement strain energy for elastoplastic stress-strain characteristics of mild steel in the form of $[f_{hy}\ \varepsilon_{hu}]$ can be expressed for carbon jackets with essentially linear elastic stress-strain characteristic in the form of $[\frac{1}{2} f_{ju}\ \varepsilon_{hu}]$, which, for typical mild steel ($f_y = 455$ MPa or 66 ksi, $\varepsilon_{su} = 15$ %) and unidirectional tows ($f_{ju} = 1\,380$ MPa or 200 ksi, $\varepsilon_{su} = 1$ %) would result in an efficiency reduction to approximately 10 % for the carbon jacket due to the low strain limits. However, tests on carbon fiber jacketed columns at UCSD [7 to 12] have shown that significantly higher compression strains (by a factor of 3 to 4) can be achieved in the confined concrete than predicted by the energy balance approach, which can be attributed to the reduced concrete dilation due to the lower ultimate strain limits in the carbon jacket. Thus, for carbon jacket retrofit designs, the confinement efficiency can conservatively be increased by at least a factor of two, resulting in an equivalent confinement factor of

$$k_j = \frac{k_s}{2 \times 0.1} = 5k_s = 0.8 \tag{14}$$

or a carbon jacket thickness

$$t_j = \frac{D}{5}\frac{f_c'}{f_{ju}}\left[0.5 + 1.25\frac{P}{f_c' A_g}\right] + 0.13(\rho_\lambda - 0.01) \tag{15}$$

The ultimate compression strain in the confined concrete can be expressed based on [4] as

$$\varepsilon_{cu} = 0.004 + \frac{2 \times 1.4 \rho_j f_{ju} \varepsilon_{ju}}{f_{cc}'} \tag{16}$$

where f_{cc}' = the compression strength of the confined concrete conservatively taken as 1.5 f_c' and the factor 2 again represents the conservative estimate of increased compression strains based on the observed experimental data from carbon fiber jacket confined plastic hinges.

With this ultimate concrete strain and a depth c_u for the flexural compression zone calculated as part of normal flexural strength calculations or from a moment curvature analysis, the resulting ultimate curvature

$$\phi_u = \frac{\varepsilon_{cu}}{c_u} \tag{17}$$

can be determined. Together with the ϕ_y from an equivalent bilinear moment-curvature

approximation (obtained from the moment-curvature section analysis), the curvature ductility

$$\mu_\phi = \frac{\phi_u}{\phi_y} \tag{18}$$

can be determined, which in turn can be expressed in the form of a member ductility factor

$$\mu_\Delta = 1 + 3(\mu_\phi - 1)\frac{L_p}{L}\left(1 - 0.5\frac{L_p}{L}\right) \tag{19}$$

where L_p = the equivalent plastic hinge length defined as

$$L_p = 0.8L + 0.022\frac{f_{sy}}{MPa}d_b \quad \text{or} \quad L_p = 0.8L + 0.15\frac{f_{sy}}{ksi}d_b \tag{20}$$

where f_{sy} = the yield strength and d_b = the bar diameter of the longitudinal column reinforcement. The length L is again defined in Figs. 5 and 6. Note that Eq. (20) is the same as the one used to assess unretrofitted columns since 90°carbon fiber wraps do not contribute to longitudinal column capacities or provide restrictions to the plastic hinge development.

Alternatively, for a given ε_{cu} which can be directly derived based on design ductility requirements from back calculation of Eqs. (19) to (16), the required jacket thickness can be expressed as

$$t_j = \frac{\rho_j D}{4} = 0.09\frac{D(\varepsilon_{cu} - 0.004)f'_{cc}}{f_{ju}\varepsilon_{ju}} \tag{21}$$

which generally results in a more economical jacket thickness than required by the standard confinement ratio Eqs. (12, 15).

To prevent column bar buckling in the plastic hinge region [2, 3], a volumetric transverse reinforcement ratio of

$$\rho_s = \frac{0.45 n f_s^2}{E_{ds} E_t} \tag{22}$$

is required, where

$$E_{ds} = \frac{4 E_s E_i}{\left(\sqrt{E_s} + \sqrt{E_i}\right)^2} \tag{23}$$

and E_t = the modulus of elasticity of the transverse reinforcement, n = the number of longitudinal reinforcing bars, f_s = steel stress at a strain of 4 % in the longitudinal reinforcement or 510 MPa (74 ksi) for grade 60 steel, E_s = the secant modulus from f_s to f_u, and E_i = the initial elastic modulus of the longitudinal reinforcement. For longitudinal grade 60 steel, E_{ds} can thus be determined as 4 530 MPa (657 ksi), resulting in

$$\rho_s = \frac{25.86\,n}{\frac{E_t}{MPa}} \quad \text{or} \quad \rho_s = \frac{3.75\,n}{\frac{E_t}{ksi}} \tag{24}$$

For a carbon fiber jacket Eq. (24) can be expressed as

$$\rho_s = \frac{4t_j}{D} = \frac{25.86\,n}{\frac{E_j}{MPa}} \quad \text{or} \quad \rho_s = \frac{4t_j}{D} = \frac{3.75\,n}{\frac{E_j}{ksi}} \tag{25}$$

The anti-buckling requirement of Eq. 25 only needs to be checked for slender columns where L^i, the distance between maximum moment location and point of inflection (Figs. 5 and 6) is greater than 4D, i.e., M / (VD) > 4.

All of the above considerations apply to circular columns.

3.2 Rectangular Columns

In cases where oval jackets can be employed on oblong or rectangular columns, an equivalent column diameter D_e

$$D_e = R_1 + R_3 \tag{26}$$

can be employed with jacket radii defined as

$$R_1 = \frac{b^2}{a}, \quad R_3 = \frac{a^2}{b} \tag{27}$$

with a and b the oval jacket principal dimensions, as shown in Fig. 10.

For rectangular column side dimensions A and B (Fig. 10), the oval jacket dimensions a and b which minimize the total length of principal axes for an elliptical jacket can be found as

$$\begin{aligned} a &= k\ b \\ b &= \sqrt{\left(\frac{A}{2k}\right)^2 + \left(\frac{B}{2}\right)^2} \\ k &= \left(\frac{A}{B}\right)^{\frac{2}{3}} \end{aligned} \tag{28}$$

The effectiveness of confining rectangular columns with rectangular jackets decreases significantly since only corner forces are generated during the dilation of the column flexural hinge. Tests on rectangular columns at UCSD [10] retrofitted with rectangular carbon jackets indicated a jacket efficiency of only 50 % of that provided by a circular jacket or an oval jacket with the above

defined equivalent radius. However, only column side aspect ratios of 1.5 were tested. Thus, for columns with side aspect ratios of 1.5 or less, a jacket thickness of twice the one calculated for an equivalent circular jacket should be assigned, whereas for columns with aspect ratios > 1.5 extrapolation of the test results to date is not recommended and oval or circular jackets should be designed.

3.3 Design of Flexural Confinement Retrofits

For confinement of flexural plastic hinge regions where the ultimate jacket stress controls the design, a long-term durability strength reduction factor of 0.9 should be employed for the carbon jacket design. For other composite materials appropriate strength reduction factors based on their expected durability characteristics should be assigned.

a) Circular Columns:

For circular columns with column diameter D, longitudinal reinforcement ratio ρ_ℓ, expected concrete strength f_c', axial load P, gross section area A_g, and ultimate jacket modulus f_{ju}, the carbon jacket thickness t_j can be determined as

$$t_j = \frac{D}{4.5}\frac{f_c'}{f_{ju}}\left[0.5 + 1.25\frac{P}{f_c' A_g}\right] + 0.13(\rho_\lambda - 0.01) \tag{29}$$

The resulting member ductility should be checked based on Eqs. (16) to (19).

Alternatively, for a given member ductility μ_Δ and required ultimate concrete strain ε_{cu}

$$t_j = 0.09\frac{D(\varepsilon_{cu} - 0.004) f_{cc}'}{0.9 f_{ju}\varepsilon_{ju}} = 0.1\frac{D(\varepsilon_{cu} - 0.004) f_c'}{f_{ju}\varepsilon_{ju}} \tag{30}$$

can be provided.

To prevent column bar buckling for columns with shear span L/D = M/(VD) > 4, a minimum jacket thickness of

$$t_j = \frac{6.9\, n\, D}{\frac{E_j}{\text{MPa}}} \quad \text{or} \quad t_j = \frac{n\, D}{\frac{E_j}{\text{ksi}}} \tag{31}$$

should be provided.

b) Rectangular Columns

For side aspect ratios ≤ 1.5, rectangular columns can be retrofitted for flexural confinement with rectangular jackets under the following design considerations:

(1) the corners need to be rounded to a radius of ≥50 mm (2 in) (25 mm or 1 in was used in the laboratory tests)

(2) the jacket thickness t_j should be twice that determined from a column with equivalent circular diameter D_e, where D_e is determined from Eqs. (26) to (28).

In all other cases where the side aspect ratio > 1.5, oval or circular carbon jackets should be designed by adding oval or circular concrete segments to the bridge column sides prior to wrapping and curing.

c) Extent of Flexural Hinge Confinement Retrofit

The jacket thickness t_j must be extended beyond the expected plastic hinge region. For bridge columns with typical axial load ratios $P/(f_c' A_g) \leq 0.3$, the confinement length L_{c1} should be greater than L/8 and greater than 0.5 D (Figs. 5 and 6) measured from the location of maximum moment. In addition, a reduced jacket thickness of 0.5 t_j should be extended for a distance L_{c2} defined by the same criteria as L_{c1} but starting at L_{c1}.

Furthermore, where jackets and/or concrete bolsters add significantly to the column dimension in the loading direction, a gap g between the retrofit measure and the adjacent bridge bent member (cap or footing) needs to be provided to avoid any strength and stiffness increase from the retrofit. For most bridge columns and retrofits, a gap of 50 mm (2 in) is sufficient to meet this objective. Other gap widths can be explicitly calculated based on the maximum expected hinge rotation and column bar buckling considerations.

4. CLAMPING OF LAP SPLICES

4.1 Lap Splice Failure Mechanism

A simplified failure model developed by Priestley [5, 6] assumes that lap splice debonding occurs in the form of failure planes in the cover concrete and along the longitudinal column bar perimeter as outlined in Fig. 11. The postulated failure model assumes the pull-out of concrete prisms. To restrain this concrete prism pull-out, clamping forces across the debonding interface and the concept of shear friction with a friction coefficient of $\mu = 1.4$ for naturally occurring concrete cracks can be assumed.

Based on the circular jacket confinement model in Fig. 12, the jacket tensile force T_j is developed by the jacket stress f_j acting over the jacket thickness t_j as

$$T_j = t_j f_j \tag{32}$$

Equilibrium of forces with an internal lateral or dilation pressure f_ℓ, can be obtained by

$$2 t_j f_j = f_\lambda D \tag{33}$$

and the required jacket thickness can be defined as

$$t_j = \frac{D f_\lambda}{2 f_j} \tag{34}$$

as a function of the lateral clamping pressure f_ℓ required to keep the lap splice reinforcement from debonding.

The debonding criteria can be obtained from the model in Fig. 11 as

$$f_\lambda = \frac{A_s f_{sy}}{\left(\frac{p}{2n} + 2(d_b + cc)\right) L_s} \tag{35}$$

where A_s = the area of one longitudinal reinforcing bar, f_{sy} = the yield strength of the longitudinal reinforcement, p = the inside crack perimeter along the longitudinal column reinforcement, n = the number of bars, d_b = the bar diameter, cc = the concrete cover to the longitudinal column reinforcement, and L_s = the lap splice length. Equation (35) assumes a 40 % overstrength of the column reinforcement past the yield stress level f_{sy} or that 1.4 f_{sy} needs to be developed in the lap splice.

Strain measurements [1] of the hoop strains in the carbon fiber jacket over the lap splice region showed that slip of the lap splice or lap splice debonding started at hoop strain levels between 0.001 and 0.002. Clearly at strain levels above 0.002 debonding was in progress as indicated by gradual loss of lateral load carrying capacity. Setting $\varepsilon_j = 0.001$ as the design limit state to prevent lap splice debonding, the jacket stress f_{jd} in Eq. (34) has to be limited to

$$f_{jd} = E_j \varepsilon_j = 0.001 E_j \tag{36}$$

In columns with low transverse reinforcement ratios, the contribution to the lateral clamping force by the horizontal reinforcement is typically ignored. This applies particularly to columns with non-circular ties since only the inner bars or tied bars would benefit from the clamping force. In cases where circular hoops or spirals are present their contribution to the lateral clamping force can be evaluated at the same dilation strain limit of $\varepsilon_d = 0.001$ as

$$f_h = \frac{0.002 A_h E_h}{D s} \tag{37}$$

where A_h = the area of the hoop or spiral reinforcement, E_h = the horizontal reinforcement modulus, D should be the spiral or hoop inside diameter but can be closely approximated by the column diameter, and s = the hoop or spiral spacing, unless volumetric reinforcement ratios $\rho_{vh} > 0.5$ % are provided.

4.2 Lap Splice Clamping Design

Based on the above mechanisms and the jacket strain limit of Eq. (36), the jacket thickness can be obtained from Eq. (34), or can be found from

$$t_j = 500 \frac{D(f_\lambda - f_h)}{E_j} \tag{38}$$

Equation (38) applies to circular columns.

Since the lateral confinement pressure f_ℓ to prevent lap splice debonding can be quite high (up to and greater than 2.0 MPa [300 psi]) the convex jacket curvature is needed to provide this clamping force. Thus, no rectangular column wraps are recommended at this stage to prevent lap splice debonding. However, if controlled debonding is permissible, rectangular jackets can prevent the cover concrete from spalling and preserve the vertical or gravity load carrying capacity of the column. Again, a design rule similar to the plastic hinge confinement in terms of twice the jacket thickness for circular columns is recommended with the same limitations on column side aspect ratios.

For all other column geometries and cases where lap splice debonding is to be prevented, a circular or oval jacket with appropriate concrete bolsters needs to be provided. The jacket design follows Eq. (37) with an equivalent diameter D as defined in Eq. (26) and with the contribution from horizontal stirrups ignored, i.e., $f_h = 0$ in Eq. (37).

The lap splice retrofit should extend over the lap length L_s as indicated in Figs. 5 and 6.

5. SUMMARY AND CONCLUSIONS

Design guidelines for continuously wound carbon jackets for bridge column retrofit were developed based on rational design models and existing and proven design and retrofit principles involving steel jackets. Separate design criteria for (1) shear strengthening, (2) flexural plastic hinge confinement, and (3) lap splice clamping were developed.

For shear retrofit, separate design criteria for circular and rectangular column jackets were derived. The same approach can also be applied for pier walls. In the cases of flexural plastic hinging and lap splice clamping, the jacket design criteria were developed for circular columns and recommendations are provided for column side aspect ratios for which rectangular carbon jackets can also be employed. The experimentally verified range of column side aspect ratios is $D/B \leq 1.5$. For these aspect ratios, rectangular carbon jacket retrofits with twice the jacket thickness developed for a circular column with an equivalent column diameter should be employed, since only a 50 % effectiveness of the rectangular jacket confinement was observed. Lap splice debonding cannot effectively be prevented with rectangular column jackets and the columns need to be converted to oval or circular cross-sections prior to retrofit application.

6. REFERENCES

[1] Priestley, M.J.N, Seible, F. Verma, R. and Xiao, Y., "Seismic Shear Strength of Reinforced Concrete Columns," Structural Systems Research Project, Report No. SSRP-93/06, University of California, San Diego, La Jolla, CA, July 1993, 120 pp.

[2] Priestley, M.J.N, Seible, F. and Calvi, M., "Seismic Design and Retrofit of Bridges," Wiley & Sons, New York, 1995.

[3] ATC-32, Revised BDS, May 1995

[4] Mander, J.B., Priestley, M.J.N. and Park, R., "Theoretical Stress-Strain Model of Confined Concrete," ASCE Journal of Structural Engineering, Vol. 114, No. 8, August 1988, pp. 1827-1849.

[5] Priestley, M.J.N, and Seible, F. (editors), "Seismic Assessment and Retrofit of Bridges," Structural Systems Research Project, Report No. SSRP-93/06, University of California, San Diego, La Jolla, CA, July 1991, 426 pp.

[6] Priestley, M.J.N, Seible F. and Chai, Y.H., "Design Guidelines for Assessment Retrofit and Repair of Bridges for Seismic Performance," Structural Systems Research Project, Report No. SSRP-92/Ol. University of California, San Diego, La Jolla, CA, August 1992, 266 pp.

[7] Seible, F., Hegemier, GA., Priestley, M.J.N., Innamorato, D., Weeks, J., and Policelli, F., "Carbon Fiber Jacket Retrofit Test of Circular Shear Bridge Column, CRC-2," Advanced Composites Technology Transfer Consortium Report No. ACTT-94/02, UCSD, September 1994, 49 pp.

[8] Seible, F., Hegemier, GA., Priestley, M.J.N., and Innamorato, D., "Seismic Retrofitting of Squat Circular Bridge Piers with Carbon Fiber Jackets," Advanced Composites Technology Transfer Consortium Report No. ACTT-94104, UCSD. November 1994, 55 pp.

[9] Seible, F., Hegemier, G.A., Priestley, M.J.N., Innamorato, D., and Ho, F., "Carbon Fiber Jacket Retrofit Test of Rectangular Flexural Column with Lap Spliced Reinforcement" Advanced Composites Technology Transfer Consortium Report No. ACTT-95/02, UCSD, March 1995, 53 pp.

[10] Seible, F., Hegemier, G.A., Priestley, M.J.N., Ho, F., and Innamoraro, D., "Rectangular Carbon Jacket Retrofit of Flexural Column with 5 % Continuous Reinforcement," Advanced Composites Technology Transfer Consortium Report No. ACTT-95/03, UCSD, April 1995, 52 pp.

[11] Seible, F., Hegemier, G.A., Priestley, M.J.N., Innamorato, D., and Ho, F., "Carbon Fiber Jacket Retrofit Test Of Circular Flexural Columns With Lap Spliced Reinforcement," Advanced Composites Technology Transfer Consortium Report No. ACTT-95/04, UCSD, June 1995, 78 pp.

[12] Seible, F., Hegemier, G.A., Priestley, M.J.N., and Innamorato, D., "Rectangular Carbon Fiber Jacket Retrofit Test Of A Shear Column With 2.5 % Reinforcement," Advanced Composites Technology Transfer Consortium Report No. ACTT-95/05, UCSD, July 1995, 50 pp.

[13] Policelli, F., "Carbon Fiber Jacket Wrapping of Five Columns on the Santa Monica Viaduct, Interstate 10, Los Angeles," Advanced Composites Technology Transfer/Bridge Infrastructure Renewal Consortium. Report No. ACTT/BIR-95/14, August 1995, 110 pp.

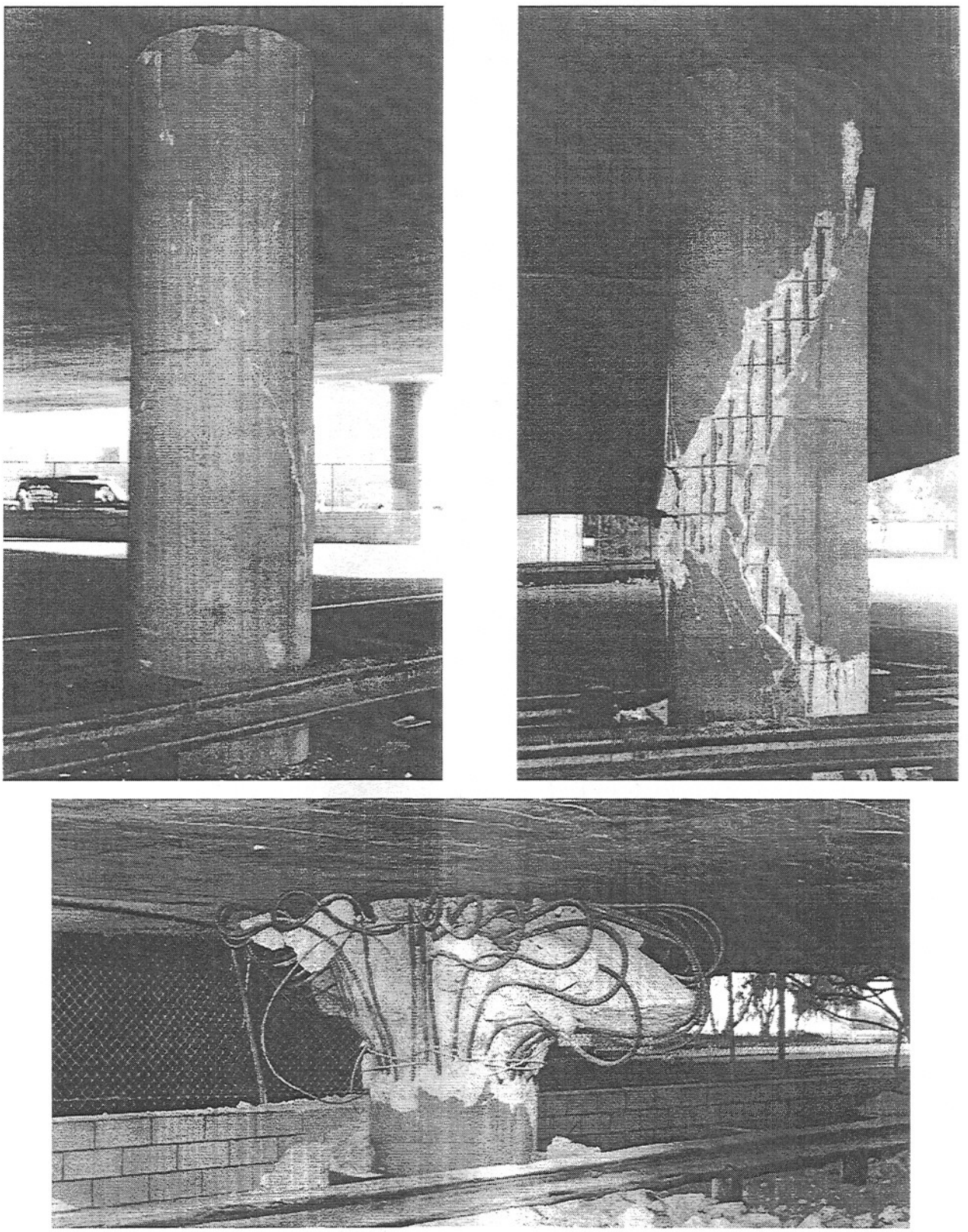

FGI. 1. Progressive Shear Failure, I-10 Santa Monica Freeway, Northridge Earthquake 1994

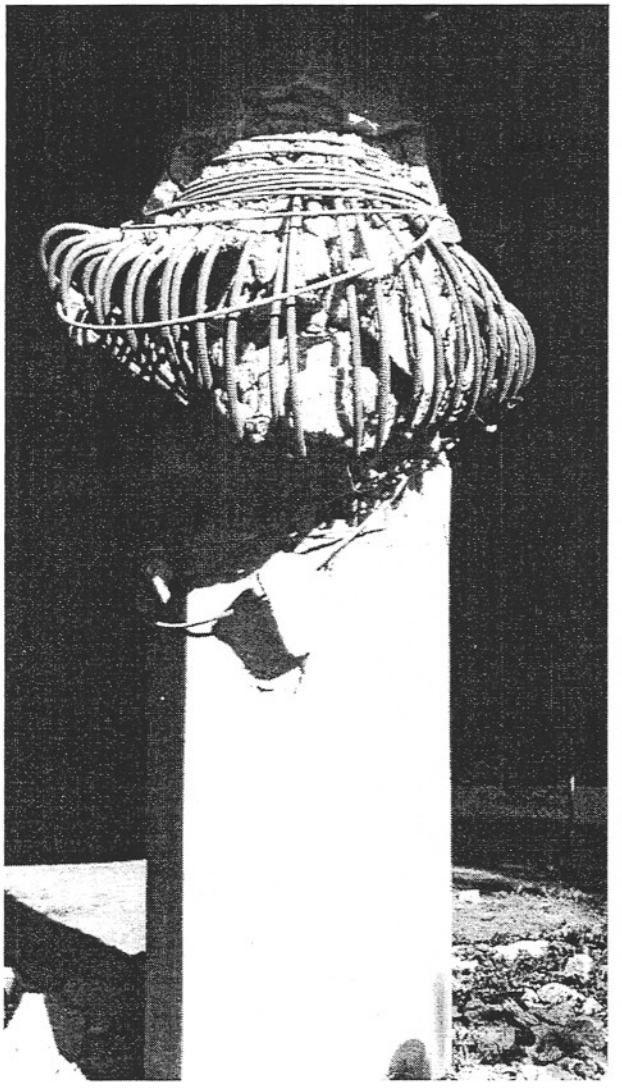

a) SR-118 Bull Creek Channel Bridge

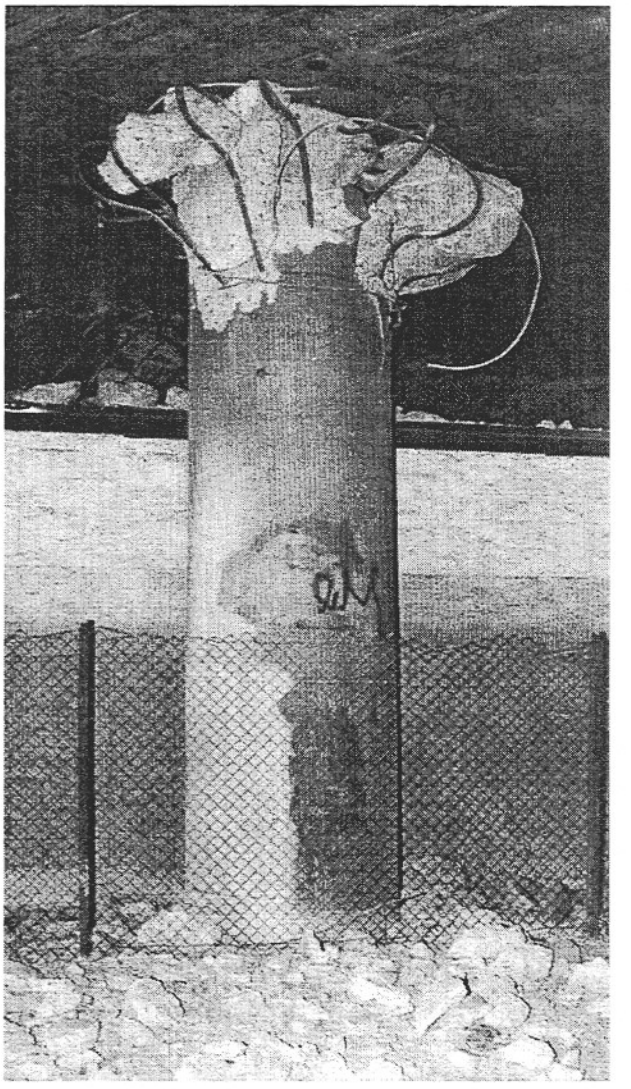

b) I-10 La Cienega and Venice

FIG. 2. Flexural Plastic Hinge Failures, Northridge Earthquake 1994

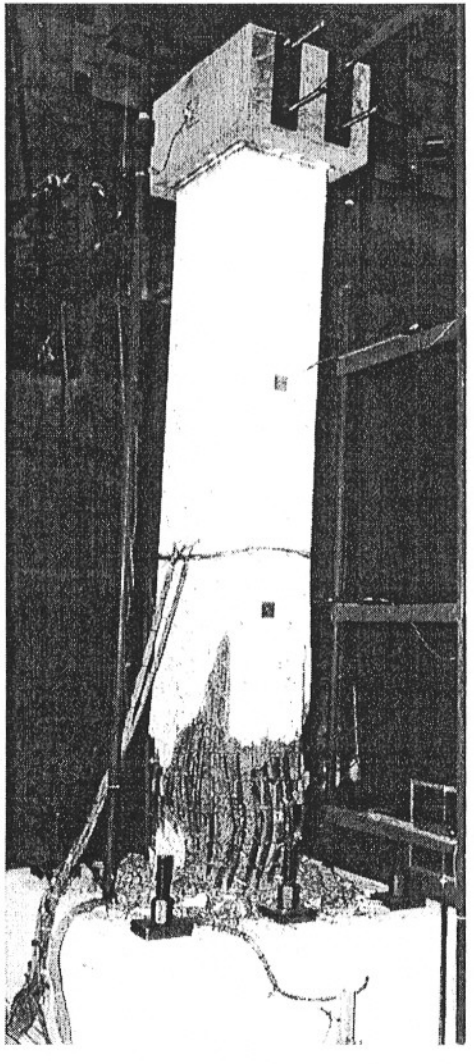

a) As-Built

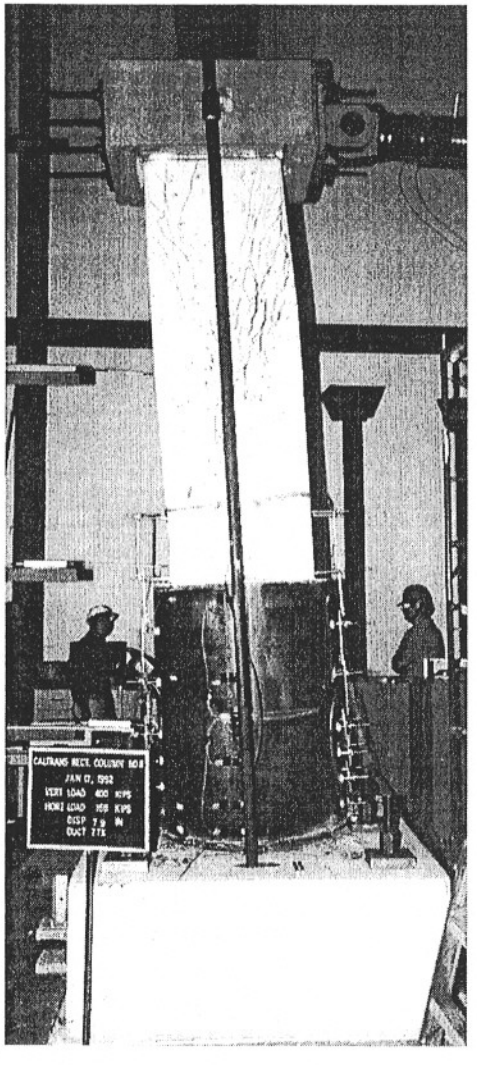

b) Steel Jacket Retrofit ($\mu_\Delta = 7.7$)

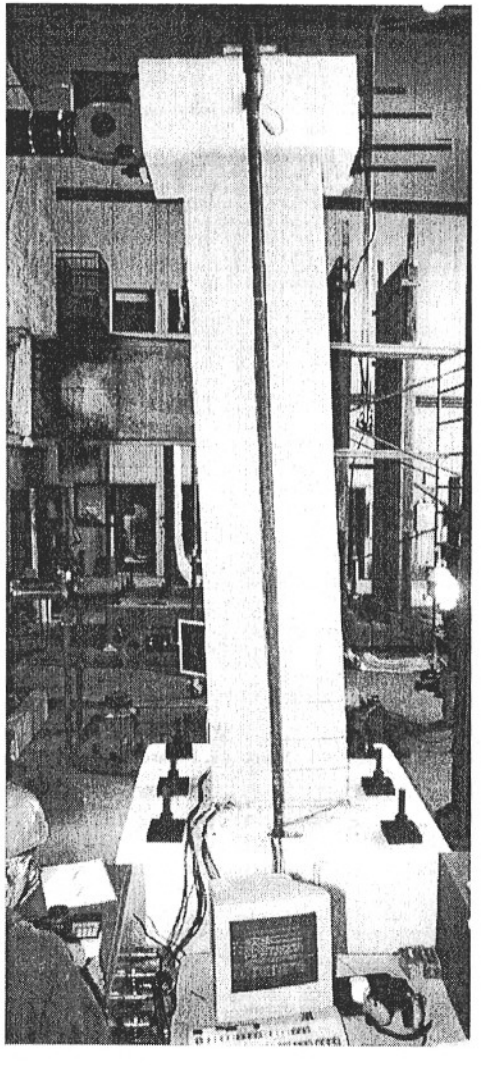

c) Carbon Fiber Retrofit ($\mu_\Delta = 8$)

FIG. 3. Flexural Hinge Failure and Retrofits of 5 % Reinforced Rectangular Column

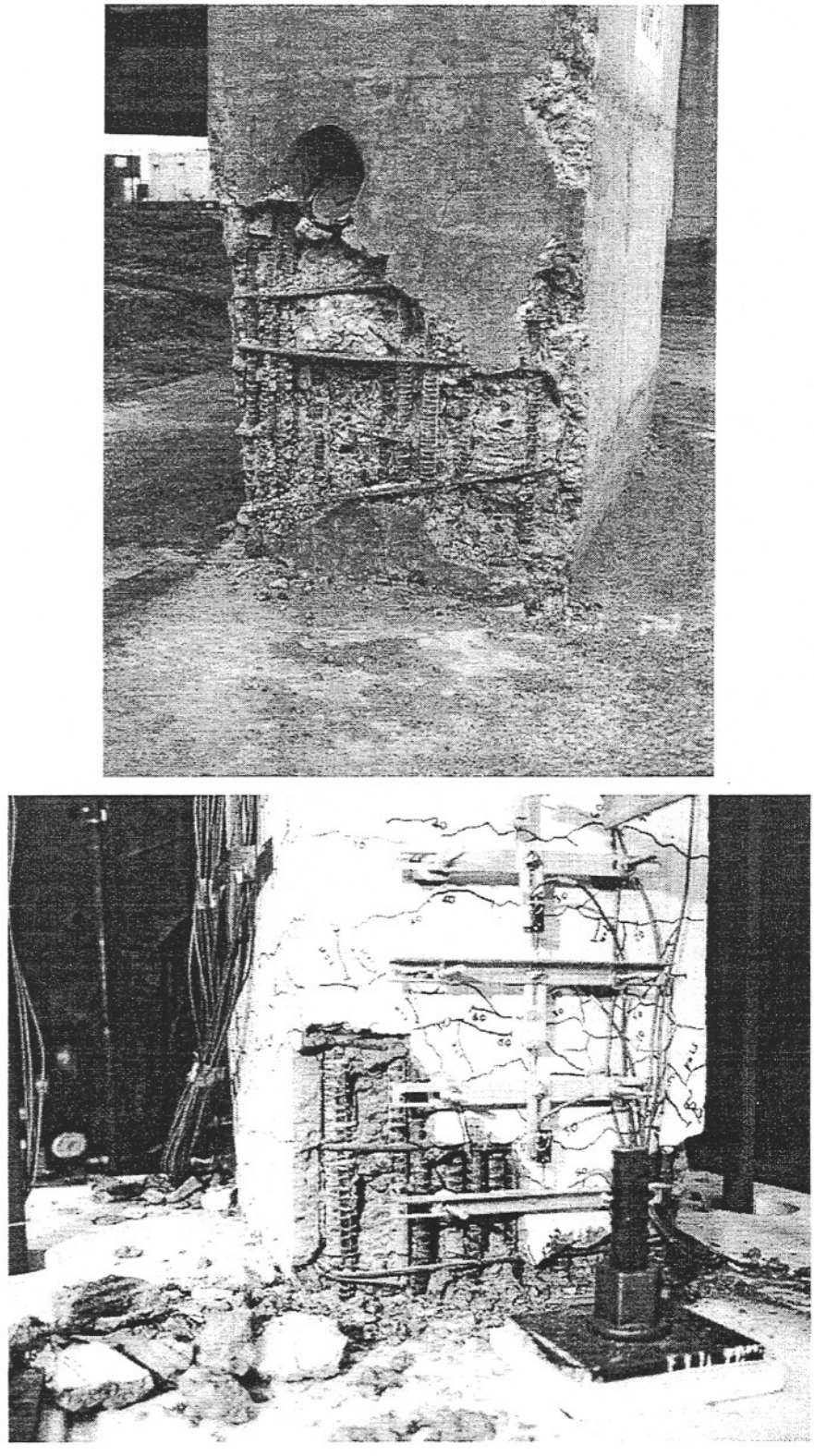

FIG. 4. Lap Splice Bond Failure During Loma Prieta 1989 and in the 40 % Scale Laboratory Tests

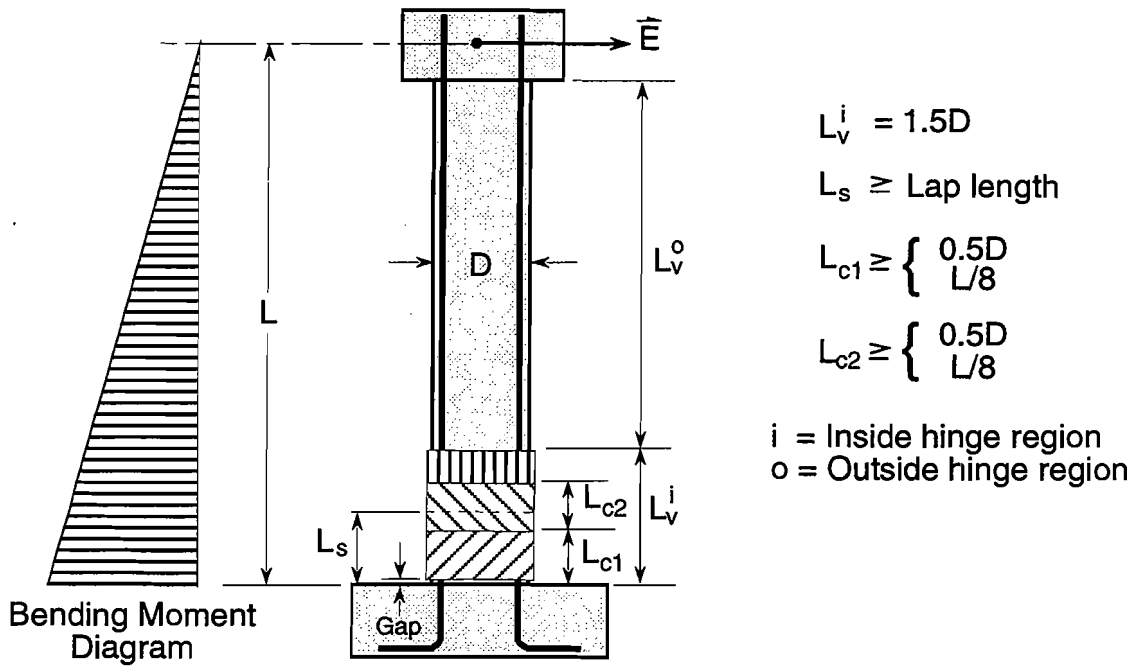

FIG. 5. Carbon Jacket Regions for Bridge Column Retrofit, Single Bending

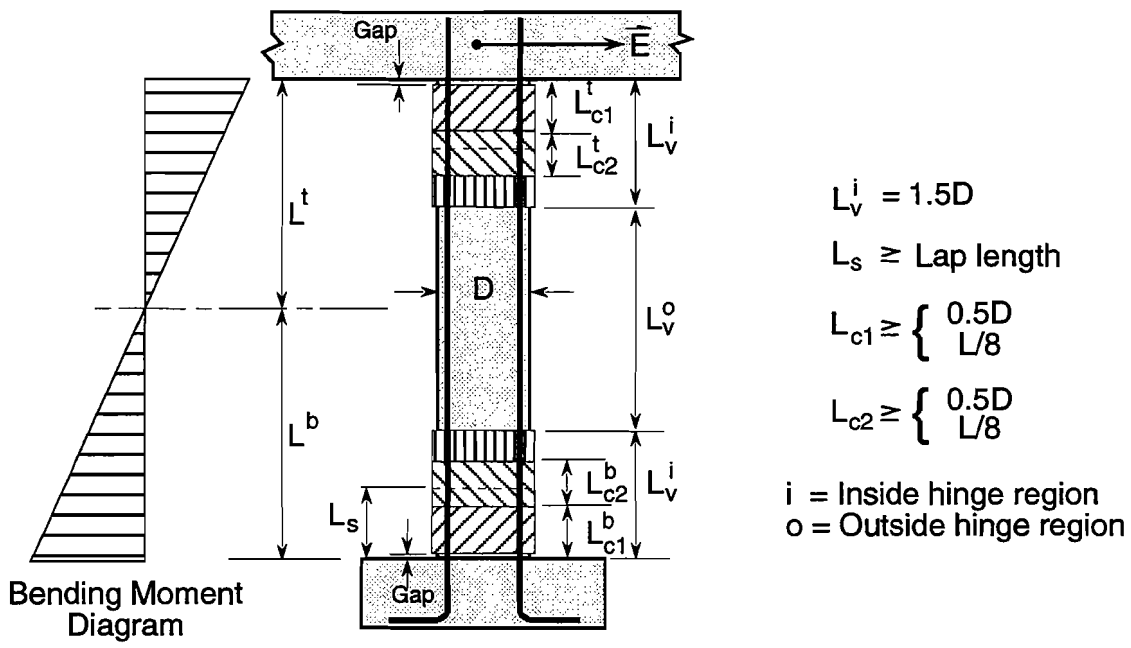

FIG. 6. Carbon Jacket Regions for Bridge Columns Retrofit, Double Bending

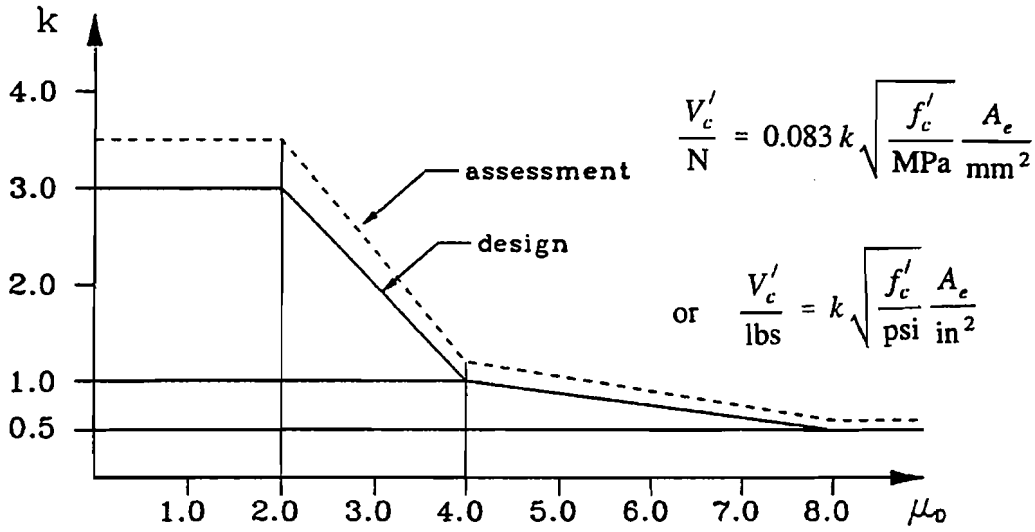

FIG. 7. Relationship Between Unidirectional Ductility and Design Concrete Shear Contribution

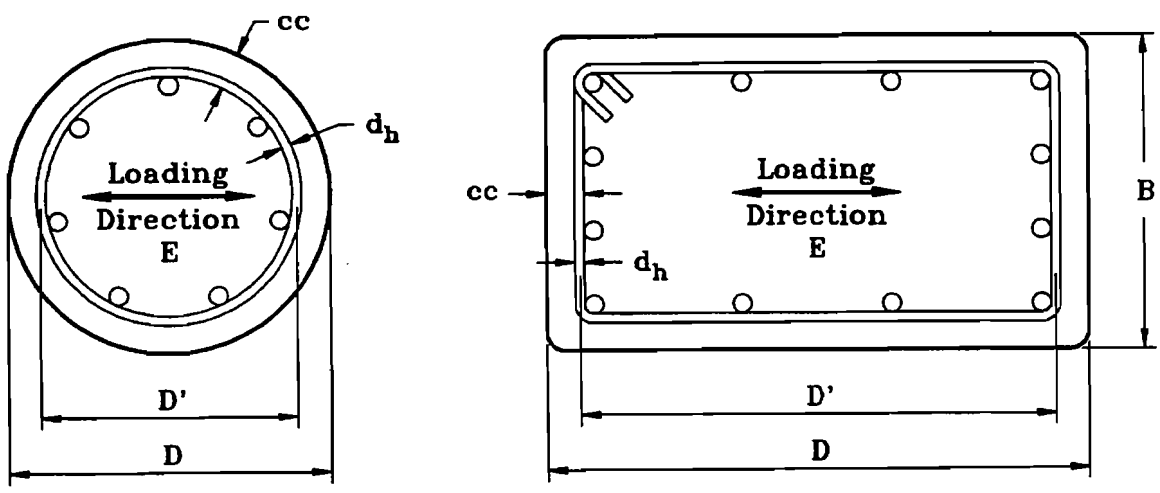

$$D' = D - 2cc + d_h$$

FIG. 8. Definition of Column Core Dimension D'

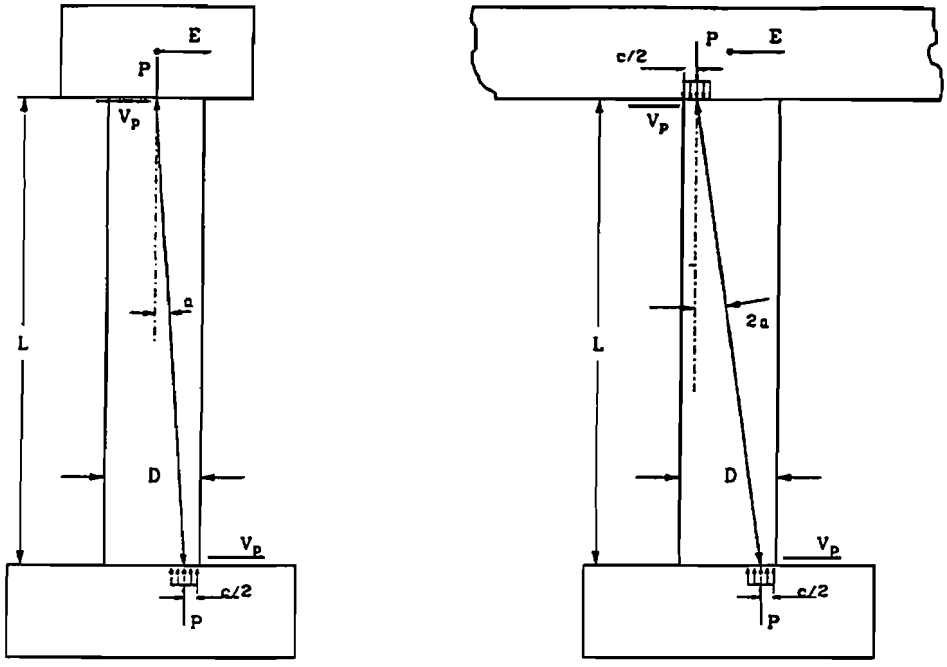

FIG. 9. Axial Force Shear Contribution

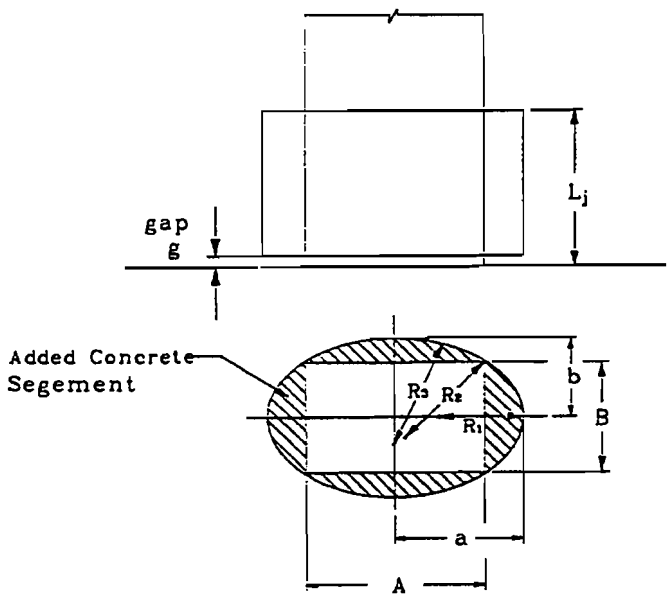

FIG. 10. Confinement of Rectangular Column Base with Oval Carbon Jacket and Added Concrete Segments

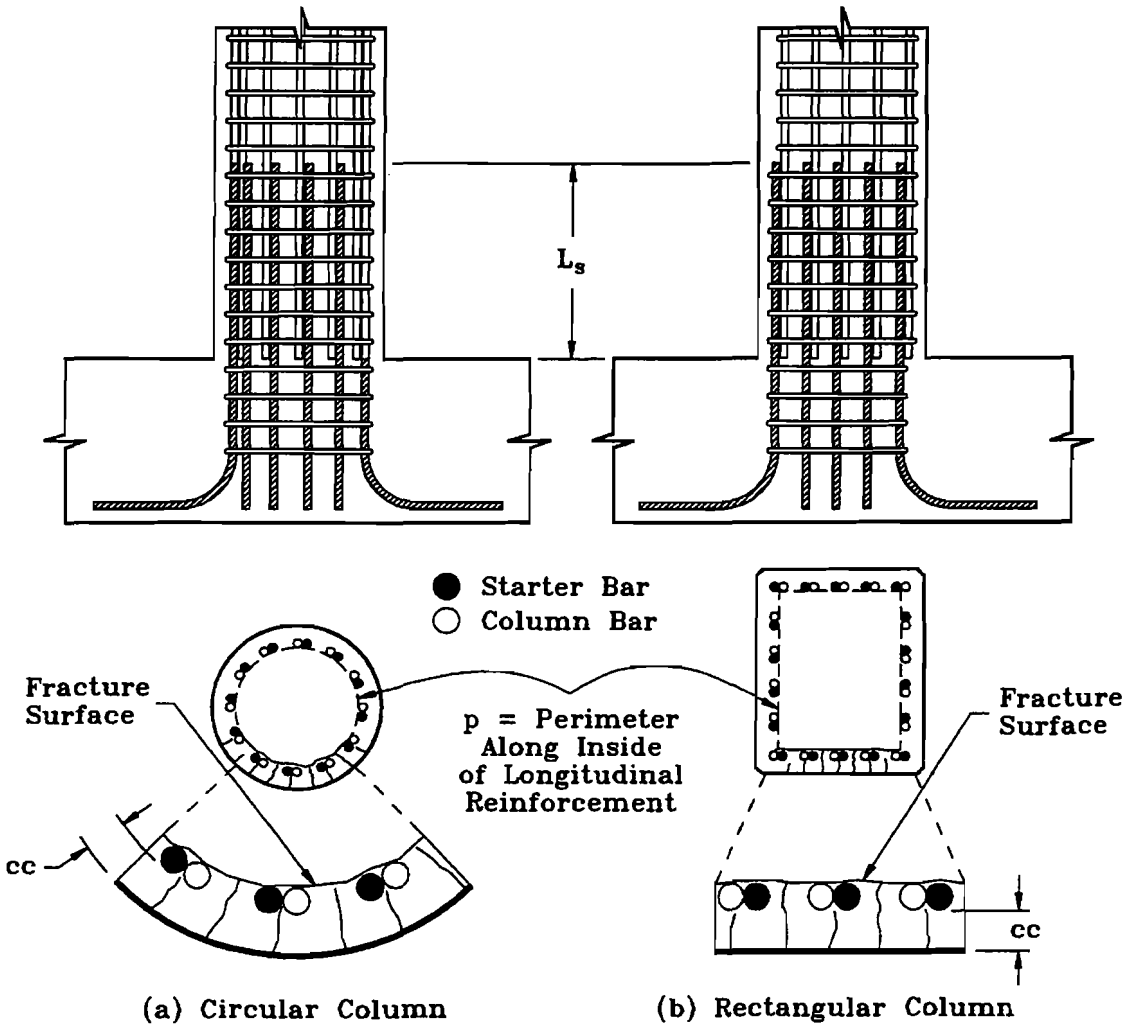

FIG. 11. Lap Splice Failure Model

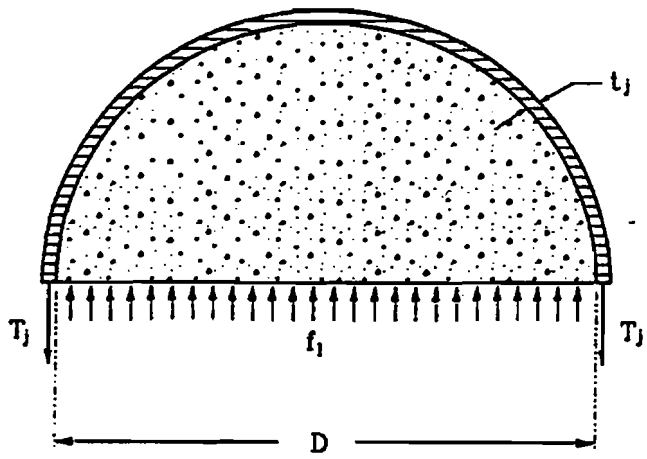

FIG. 12 Confinement of Circular Column by Passive Jacket

APPENDIX 3.1B

CALTRANS SPECIFICATIONS

Composite column casings: memo to designers 20-4B 3-40
Alternative column casing specifications for seismic retrofit:
pre-qualification requirements 3-42
AENC. DOC 8.11.97 3-52

In conformance with NIST policy, SI units are used as primary units in this document. U.S. customary units, used exclusively in the original specifications, are included in parentheses.

Caltrans Memo to Designers 20-4B, August 1996:

Composite Column Casings

Several composites columns casing systems have undergone laboratory testing and are approved for use in limited situations. Composite column casing thicknesses as shown on the Standard Drawing are designed to prevent plastic shearing. Material testing standards and provisional specifications have been developed to allow limited field installations for both E-glass and carbon fiber composites, under strict conditions.

Composites systems shall be specified as an alternative if conditions below are satisfied:

1. In all cases, all projects shall be detailed for steel casings as a standard with composites retrofit as an alternative.
2. Displacement ductility demand shall be not more than 6 for circular columns and not more than 3 for rectangular columns. It may be permissible to use composites on circular columns with ductility demands approaching 8, with the written approval of the Office of Earthquake Engineering and the Design Supervisor.
3. For rectangular columns, the longest dimension is limited to a maximum of 0.91 m (36 in). Rectangular column sides aspect ratio shall not be greater than 1.5.
4. For circular columns, the diameter must be 1.83 m (72 in) or less.
5. A steel jacket is the only approved retrofit method for columns that require a fully contained (fixed) lap splice. Composites may be used if a pin or slipping is assumed in the analysis at a lap splice.
6. Composites shall not be used for single column bent structures.
7. Composites shall not be used if the axial dead load is greater than $0.15 f_c' A_g$.
8. Composites shall not be used if the columns longitudinal reinforcement ratio is greater than 2.5 %.
9. Composites shall not be used for bridges which require flame-sprayed plastic.
10. Composites shall be used with prismatic columns only.

For situations not falling within the above limits, the Office of Earthquake Engineering shall be consulted for necessary design guidelines and approval. A list of current allowable systems may be obtained from the Office of Earthquake Engineering, New Technology Management Branch at (916) 227-8247. Requirements above are subject to change as more information becomes available. Questions on the above should be directed to the New Technology Management Branch at (916) 227-8247 or Seismic Technology at (916) 227-8806.

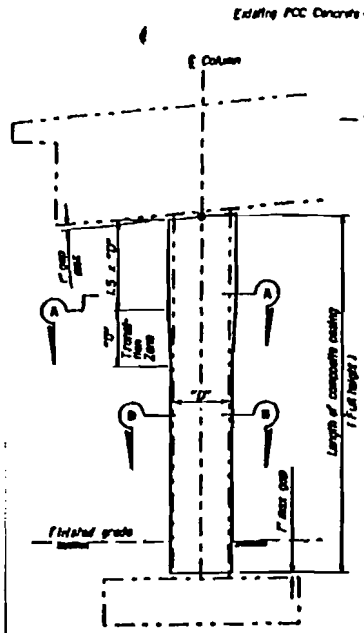

COLUMN RETROFIT
NO SCALE

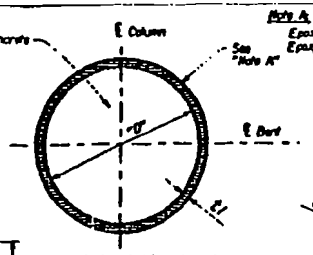

SECTION A-A
NO SCALE

Note A:
Epoxy Resin-Glass Composite or Epoxy Resin-Carbon Composite

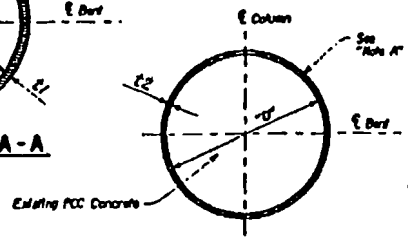

SECTION B-B
NO SCALE

Note:
Existing rectangular column concrete column surfaces shall be straight or slightly convex outward at all areas to be covered by jackets; otherwise, the surface shall be filled with epoxy.

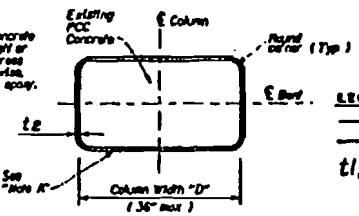

SECTION B-B
NO SCALE

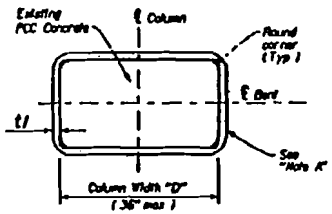

SECTION A-A
NO SCALE

LEGEND

- - - - Indicates Existing Structure

——— Indicates New Construction

t1, t2 Denotes Minimum Thickness of Accumulated Dry E-Glass Wraps or completed Carbon Jacket thickness (excluding coatings)

DIST.	COUNTY	ROUTE	POST MILE TOTAL PROJECT	SHEET NO.

REGISTERED ENGINEER - CIVIL

PLANS APPROVAL DATE

The State of California or its officers or agents shall not be responsible for the accuracy or completeness of electronic copies of this plan sheet.

E-Glass Notes:

1. Each composite section shall be wrapped using continuous E-glass fabric not less than 2 feet in height. All wraps of continuous E-glass weave shall be hand-rolled a minimum of 12" past the starting point of the initial wrap. Subsequent wraps shall be started (buttled) at the ending point of the last wrap.
2. All cut edges shall be sealed with epoxy.

Carbon Notes:

1. Pre-preg carbon jacket shall be completely cured by elevated temperature.
2. Pre-preg carbon fiber sheets shall contain continuous strands not less than 100 feet in length.

General Notes:

1. For column heights less than 5x"D", use constant thickness full height of t1.
2. For hexagonal or octagonal columns use composite thickness specified in "Rectangular Column" table.
3. Remove any sharp corners to 1/2" radius minimum.
4. All materials shall be protected from moisture.
5. Drainage opening reinforcement shall be of the same material used for the column casing
6. The casing thickness shall taper evenly the full length of the transition zone.
7. The composite casing shall adhere firmly to all surfaces of the existing column.

SYSTEM 1
FIBER VOLUME = 35% min

E-GLASS ROUND COLUMN		
COLUMN DIA	t1 (min)	t2 (min)
12"	.20"	.20"
24"	.35"	.20"
36"	.50"	.25"
48"	.65"	.35"
60"	.85"	.40"
72"	1.00"	.50"

SYSTEM 2
FIBER VOLUME = 50% min

CARBON ROUND COLUMN		
COLUMN DIA	t1 (min)	t2 (min)
12"	.05"	.03"
24"	.08"	.03"
36"	.10"	.03"
48"	.13"	.08"
60"	.17"	.08"
72"	.20"	.10"

E-GLASS RECTANGULAR COLUMN		
COLUMN WIDTH	t1 (min)	t2 (min)
12"	.25"	.20"
24"	.50"	.25"
36" max	.75"	.40"

CARBON RECTANGULAR COLUMN		
COLUMN WIDTH	t1 (min)	t2 (min)
12"	.05"	.03"
24"	.10"	.03"
36" max	.15"	.08"

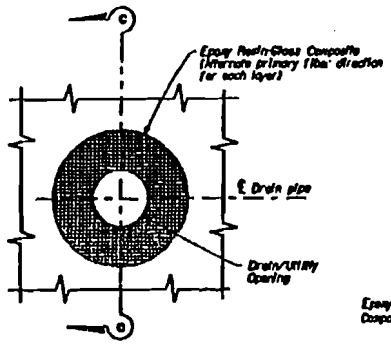

E-GLASS OPENING
NO SCALE

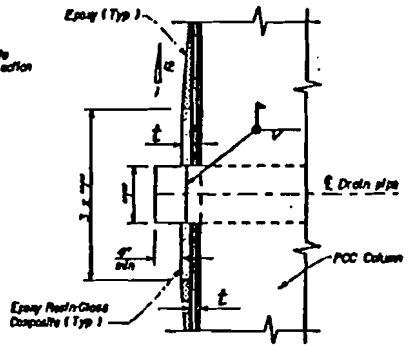

SECTION C-C
NO SCALE

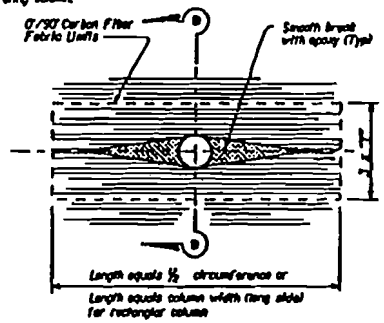

CARBON OPENING
NO SCALE

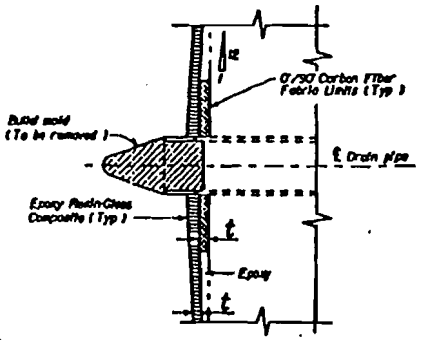

Note:
For details not shown see "Section D-C"

SECTION D-D
NO SCALE

STANDARD DRAWING			
FILE NO. ES 98-70	DESIGN P. PAT HAPLEY	CHECKED RAY BELINSKI	APPROVAL RECOMMENDED BY
DATE 8/98	DETAILS P. RALPH BARGERA	PROJECT PAT HAPLEY	BRIDGE SUPERVISOR
	SUBMITTED BY RAY BELINSKI		

STATE OF CALIFORNIA
DEPARTMENT OF TRANSPORTATION

DIVISION OF STRUCTURES
STRUCTURE DESIGN

BRIDGE NO.

POST MILE

COMPOSITE COLUMN CASING

ORIGINAL SCALE IN INCHES FOR REDUCED PLANS 0 1 2 3

CU
EA

BRIDGE NAME PLATE DRAWING
EARLIER REVISION DATES

REVISION DATES (PREVIOUS STATE USE)	SHEET

CALTRANS 7/1/97
Pre-qualification Requirements for Alternative Column Casings for Seismic Retrofit (Composites)

SECTION I - GENERAL

Part 1.

Caltrans will specify only those composite column casing systems which have been prequalified for use on its projects.

For purposes of prequalification, a composite column casing system consists of the unique physical form of the system; the materials system, including the fiber material, physical form of the fiber material, resin, primer, and adhesive as applicable; the installation process; the system supplier; the materials supplier; and the installer. If any part of the system is changed, it will be considered to be a new system.

The technical requirements for system prequalification are outlined in Section II of this document. All the test requirements may not apply to a particular system, and additional tests may be appropriate for some proposed systems. Caltrans will determine the specific test requirements for prequalification of each proposed system. Testing shall be performed by an independent laboratory located in California and approved by Caltrans. Satisfactory performance of a system subjected to the tests will be determined by Caltrans.

All new systems proposed will be subject to all the prequalification requirements. If limited testing is proposed because a new system is similar to a currently prequalified system, Caltrans will determine the extent of testing required.

Except as otherwise noted, all test data submitted for prequalification of composite column casing systems or generated during the prequalification process will become public information.

A proposed design procedure shall be submitted which is based on the results of test data and generally accepted structural theory. Design formulas should be simplified in a rational manner so as to be useful for practical design purposes. Caltrans will implement the design of column casings on its projects where appropriate, and may use either the proposed design equations or other formulas which have been shown to be more practical.

A specification shall be submitted to fully describe the proposed system. This information will be incorporated into the project special provisions as appropriate.

Part 2. Prequalified systems

Composite column casing systems which have been prequalified will be incorporated into the Caltrans standard special provision for alternative column casing.

At the present time, no system has been subjected to the full list of requirements for durability testing in accordance with Section II, Part 4 of this document. Therefore, the prequalification of any composite system is conditional upon the following criteria:

1. Composite column casing system suppliers who have satisfactorily completed structural testing and who possess their own 1 000 hour durability test data will be allowed to provide composite column casing, when it is specified in the contract documents, for Caltrans projects advertised no later than June 30, 1996.

2. After June 30, 1996, all composite column casing system suppliers must provide Caltrans with independent 1 000 hour durability test data as a minimum to prequalify or remain prequalified.

3. After November, 1996, all composite column casing system suppliers must provide Caltrans with independent 3 000 hour durability test data as a minimum to prequalify or remain prequalified.

4. After November, 1997, all composite column casing system suppliers must provide Caltrans with independent 10 000 hour durability test data as a minimum to prequalify or remain prequalified.

An adjustment factor for durability will be applied to the thickness design for column casing, due to the fact that there is only limited durability test data available. After evaluation of 3 000 hour and 10 000 hour durability test data, the adjustment factor may be reduced.

Part 3. Coordination With Caltrans

All inquiries regarding prequalification of composite column casing systems should be addressed to Mohsen Sultan, Caltrans, Office of Earthquake Engineering, P.O. Box 942874, MS 9, Sacramento, CA 94274-0001; phone 916-227-8247.

SECTION II - TECHNICAL REQUIREMENTS

Scope

This section provides a detailed listing of the requirements for prequalification of materials and processes intended to be used as composite alternative column casings for seismic retrofit applications. The document is divided into six Parts: General System Description, Basic Materials Testing and Information, Composite Testing, Durability Testing, Column Testing, and Process Specification.

Because of the possible wide variety of materials and systems that may seek qualification under this requirement, it is understood that some tests listed under the various Parts may not be applicable to a particular system. If there is a question as to applicability, Caltrans should be consulted.

Part 1. General System Description

Applicant shall furnish to the Department a brief, general description of the proposed system to be qualified. Information to be supplied in this document, in the order listed, should include but is not limited to the following:

Section 1.	**Primary material(s)** Glass, carbon/graphite, polymer, etc.
Section 2.	**Form(s)** Woven fabric, sheet, hybrid, tow or yarn, pre-preg, preform, laminate, etc. (Preforms and laminates should indicate construction)
Section 3.	**Application Method(s)** Hand lay-up, machine winding, any consolidation/compaction processes, etc.
Section 4.	**Composite Matrix Binder/Resin and Adhesive*** Epoxy, polyester, polyurethane, vinylester, etc.
Section 5.	**Composite Curing Process(s)** Ambient temperature cure, elevated temperature cure (Include details of proposed methods)
Section 6.	**Composite Properties** Tensile strength, strain at failure, modulus, lap shear strength, apparent interlaminar shear strength
Section 7.	**Quality Control/Quality Assurance Protocols**
Section 8.	**Protective Finish Coating(s)**
Section 9.	**Listing of Basic Materials Suppliers**

*Throughout this document a distinction is made between a 'resin', such as used in prepreg materials, on-site fiber saturation, and the construction of preforms and laminates, and an 'adhesive', such as would be applied between layers of preformed laminates during assembly to the column.

Part 2. Basic Materials Testing And Information

Applicant shall furnish to the Department quality control/quality assurance procedures, test methods, test data, and typical values for all materials to be used in composite alternative column casing systems to be qualified. This requirement shall apply specifically to Sections 1, 2, and 4 listed in the preceding section. Upon qualification of the composite casing system, a certificate of compliance for the respective materials shall be available to the Engineer when requested, such certificate traceable to supporting test data.

For **Section 1, Primary Materials,** information to be furnished shall include as a minimum test methods used and test data for:

Ultimate Tensile Strength
(Primary material)
Modulus
Mass per Unit Length
Mfg. Description / Designation
Strain to Failure
Density / Specific Gravity
Sizing Content
(When applicable)

For **Section 2, Form,** information to be furnished shall include as a minimum test methods used and test data for:

Fabric Construction
(Including fiber or yarn orientations, weight ratioof primary fiber/others)
Mass per Unit Area
Tensile Strength
(Primary and 90° to primary)
Strain at Failure
(Primary and 90° to primary)
Thickness
Tows, Fibers or Yarns per Inch of Width
(Both directions, if applicable)
Resin Content, mass %
Fiber Content, volume % and mass %
Gel Time @ Curing Temperature
Cure Time @ Curing Temperature
Interlaminar Shear Strength
(Laminates)
Modulus
Fibers per Tow or Yarn
(Twisted or Non twisted)
Volatiles, Mass %
Glass Transition Temperature
(Preforms and laminates)
Drape
Density and / or Specific Gravity
(ASTM D 792, D 1505)
Tack
Mfg. Description / Designation

For **Section 4, Matrix Binder/Resin and Adhesive.** Test results to be furnished shall be derived from flat panels of the neat, cured materials. The panels shall be cured in the manner identical to that which will be used in the composite column casing at installation. Ambient cure materials shall be cured at least seven days at 24 °C ± 2 °C (75 °F ± 3 °F) prior to testing, and no elevated temperature post- curing of ambient systems shall be done unless such post-curing is also done as a matter of course during field installations. Test methods used and test data shall be furnished on the following parameters:

Tensile Strength
Modulus
Glass Transition Temperature, Tg
Temperature / Time / Gel Time Curve
Temperature / Time / % Cure Curve
Lap Shear Strength
(Composite adherents)
Strain at Failure
Mixing Ratio, volume and mass
Infrared or HPLC Curves
(Component A, Component B)
DTA, DCS, or DMA Curves
Mfg. Description / Designation

Part 3. Composite Testing - Flat Laminate Samples

The following Section describes the required properties and test data to be furnished to Caltrans for the proposed alternative composite column casing system, as determined from prepared flat laminate panels of the composite.

Composite sample testing shall be performed by an independent testing facility, which shall be located in California. The applicant will be responsible for all composite sample preparation. Caltrans shall be notified prior to any sample preparation or testing. Such notification shall include the name and location of the testing facility or facilities. Caltrans or a designated representative shall retain the right to be present at any time during sample preparation or any testing related to a proposed composite column casing system. Caltrans reserves the right to request additional tests or testing and to perform or have performed any correlation testing or other tests as may be deemed necessary.

Flat laminate samples of the composite shall be prepared consistent with techniques of field application of the composite system. These shall be cured in a manner identical to that which will be used in column casing installation in the field. Ambient-cure composite laminates shall be cured at least 7 days at 24 °C ± 2 °C (75 °F ± 3 °F) prior to any testing. No elevated temperature post-curing of ambient cure materials will be permitted unless such curing is also performed as a matter of course during system field application. ASTM test methods indicated shall be used except where published alternative equivalent methods by an industry-recognized organization (SACMA, etc.), may be available. The use of such alternative methods shall be documented.

All parameters listed below shall be determined on all systems submitted for qualification. Results should be expressed in U.S. Customary (inch-pound) units. International System (metric, SI) conversions may be reported if enclosed in parentheses following the inch-pound units, i.e., 175 ksi (1.21 GPa).

Results from the following tests will be used to establish 'baseline' or reference values for comparison to results from the Durability Testing, Part 4. In those instances where indicated (*) the testing of a minimum of twenty (20) specimens will be required in order to establish statistical information. At least five (5) control specimens shall be tested from each individually processed test panel. Other tests shall consist of a minimum of five (5) control specimens with at least one (1) specimen tested for each individually processed panel.

***ASTM D 3039, Primary Fiber Direction**
(Tabbed-end specimens)
Tensile Strength
Strain at Failure
Modulus
Thickness

ASTM D 792 or D 1505
Density and/or Specific Gravity

***ASTM D 3165**
Lap Shear Strength

***ASTM D 3418 or D 4605**
Glass Transition Temperature, T_g

***ASTM D 2344**
Interlaminar Shear Strength

ASTM D 3171 or D 2584, as appropriate
Fiber Content, Volume % and Mass %

ASTM D 2734
Void Content, Volume %

ASTM D 2240
Shore Hardness

Test results shall be averaged, and normalized based on composite dry fiber thickness or alternatively, composite fiber volume. The normalization process, normalizing value, and normalizing calculations shall be indicated in the report, and shall be consistent for all tests.

Part 4. Durability Testing

Durability testing shall be performed on specimens derived from flat laminate samples of the composite system prepared in 3, above. To avoid any wicking influences or other problems all cut, machined, or otherwise exposed edges of the panels shall be sealed with a suitable sealant prior to exposure. Except for Glass Transition Temperature tests, where a minimum of two (2) specimens shall be tested per interval, a minimum of five (5) specimens shall be tested in each of the conditions listed at the intervals stated and the results normalized and averaged prior to comparison to baseline values.

Caltrans will determine those systems for which adhesive environmental testing is required. In general, any casing system in which a separately cured adhesive is used to bond previously cured composite components together or onto the column is susceptible to adhesive degradation. Thus, environmental durability must be demonstrated for these systems. The environmental durability matrix for adhesives is equivalent to that for composite laminates. Lap shear strength will be used to measure adhesive degradation on samples having composite adherends. A minimum of twenty (20) specimens will be required to establish a statistical baseline. A minimum of five (5) lap shear specimens shall be tested in each of the conditions listed at the intervals stated.

The determination of material properties used for specifying minimum overwrap thicknesses for column casings will take into account any reductions in properties resulting from durability testing. Appearance of delamination or decomposition of the panels during exposure, or of the panels or specimens following exposure, shall constitute unsatisfactory or non-qualifying performance. In addition, all qualifying samples subjected to durability testing must retain a minimum of 85 % of the baseline values for the tests listed. Except where noted, all samples subjected to durability testing conditions shall be tested after exposure according to the following methods and tests. All tests shall be conducted at 24 °C ± 2 °C (75 °F ± 3 °F).

ASTM D 3039, Primary Fiber Direction
(Tabbed-end specimens)
- Tensile Strength
- Strain at Failure
- Modulus

ASTM D 3165
- Lap Shear Strength

ASTM D 3418 or D 4065
- Glass Transition Temperature, T_g

ASTM D 2344
- Interlaminar Shear Strength

ASTM D 2240
- Shore Hardness

A. Water Resistance

Panels shall be exposed to a condition maintained at 100 % relative humidity and 38 °C ± 1 °C (100 °F ± 2 °F). (Apparatus as described in ASTM D 2247 or ASTM E 104 is satisfactory.) Specimens shall be tested at intervals of 1 000 hours, 3 000 hours, and 10 000 hours exposure. Specimens should be tested as soon as possible after removal from the water.

B. Ultraviolet Resistance

Panels shall be subjected to exposure in equipment meeting the requirements of ASTM G 53, using FS 40 UV-B bulbs. One cycle shall be four (4) hours at 60 °C (140 °F) and four (4) hours of condensate exposure at 40 °C (104 °F). After 100 cycles the specimens shall be removed and tested as above.

C. Temperature Resistance

Panels shall be subjected to a continuous temperature of 60 °C (140 °F) for 1 000 hours and 3 000 hours before testing. Specimens shall be allowed to return to ambient temperatures prior to testing.

D. Salt Water Resistance

Panels shall be totally immersed at 24 °C ± 2 °C (75 °F ± 3 °F) in an artificial sea water solution prepared according to ASTM D 1141, omitting heavy metal reagents, for intervals of 1 000 hours, 3 000 hours, and 10 000 hours prior to testing. The artificial sea water shall be regularly monitored. and changed or refreshed as needed. Specimens should be tested as soon as possible after removal from the salt water.

E. Fuel Resistance

Panels shall be immersed for four (4) hours in diesel motor fuel prior to testing. Specimens should be tested as soon as possible following removal from the diesel fuel.

F. Alkali Resistance

Panels shall be immersed in a saturated solution of calcium hydroxide (pH 12.4) at 24 °C ± 2 °C (75 °F ± 3 °F) for intervals of 1 000 hours, 3 000 hours, and 10 000 hours prior to testing. The pH of the solution shall be monitored at regular intervals and the solution changed as needed.

G. Freeze-Thaw Resistance

Panels shall be subjected to freeze-thaw cycling by exposure for 24 hours under A, above, followed by 24 hours at -18 °C (0 °F). Panels shall be subjected to twenty (20) freeze-thaw cycles, and shall be allowed to return to ambient temperature prior to specimen preparation and testing.

Part 5. Column Testing

A. Reduced Scale Structure Test

All composite column casing systems shall satisfy reduced scale cyclic column testing to verify casing's constructability and effectiveness as a seismic retrofit measure. To qualify a system as an alternative column casing for seismic retrofit, a minimum of two types of retrofit enhancements shall be demonstrated and tested in accordance with the requirements specified herein. Test results must satisfy Caltrans requirements relative to ductility performance, shear strength, and flexural enhancement. For each shape, cyclic tests shall be conducted to demonstrate the performance of both retrofit enhancements and corresponding unretrofitted "As-Builts ". Manufacturers may elect to qualify only one shape (circular or rectangular) by satisfying all tests requirements for either the circular tests or rectangular tests, thus limiting their qualifications to these systems.

For each geometrical shape, and for each corresponding enhancement, a minimum of one retrofitted "As-Builts" column and one unretrofitted column shall be built and tested. For example, to qualify a system for circular column retrofit applications, the following four test specimens must be constructed and tested:

1. Circular Shear As-Built Column (Unretrofitted)
2. Circular Lap Splice As-Built Column (Unretrofitted)

3. Circular Shear Retrofitted Column subjected to double bending load
4. Circular Lap Splice Retrofitted Column subjected to single bending load.

All column details shall conform to the requirements provided herein. Retrofit jacket thickness (or fiber ratio) shall comply with the current Caltrans design criteria, with proper scaling factors when applicable, and shall satisfy the following:

1. Minimum confinement stress of 2.0 MPa (300 psi) in the lap splice and/or plastic hinge zone;
2. Maximum material strain of 0.001 in the lap splice zone and 0.004 in the plastic hinge zone;
3. Minimum confinement stress of 1.0 MPa (150 psi) and material strain of 0.004 must be maintained elsewhere in the column with appropriate transition;
4. Minimum displacement ductility for the retrofitted column of 8 to 12 is to be expected.

An expected concrete strength of 34 MPa (5 000 psi) at the time of testing and Grade 60 reinforcing steel shall be used, although Grade 40 is preferable when available.

The concrete design shall have aggregate no larger than 13 mm (0.5 in). The footing block as well as the loading block of the test columns shall be properly reinforced such that no degradation in these locations is allowed.

The test specimens shall conform to the following :

1. Cross Sections

The cross section of the rectangular test column shall be 610 mm x 610 mm (24 in x 24 in) with atotal of 28 #6 longitudinal bars evenly spaced with #2 ties at 125 mm (5 in) spacing. Thecross section of the circular testcolumn shall be 610 mm (24 in) in diameter with a total of 20 #6 longitudinal bars evenly spaced with #2 ties at 125 mm (5 in) spacing.

2. Shear Enhancement Specimen

The shear enhancement test columns shall have a clear span of 2.4 m (96 in) shear arm between anchorage blocks.

Note: The shear test specimen shall maintain a maximum aspect ratio of 4 in the direction of the test if dimensions are modified.

3. Lap Splice Enhancement Specimen

The lap slice enhancement columns shall have the moment arm of 3.66 m (144 in).

4. Loading

Test columns shall be subjected to a vertical load (axial) of $0.1\ f'_c\ A_g$ where concrete strength based on the original design strength of 22.4 MPa (3 250 psi). For example, the column with rectangular section should have a vertical load of 845 kN (190 kips).

The attached figures illustrate column configuration requirements.

5. Instrumentation

The structure test specimens shall be instrumented to record strains at various locations during the testing. The minimum instrumentation requirements are listed below:

- 4 strain gages shall be installed on each of the 2 ties (hoops) at the location closest to the column mid-height.
- 4 strain gages shall be installed on each of the lower 3 ties (hoops) at the bottom of the column.
- 6 strain gages shall be installed on the 2 vertical bars in the directions of push and 6 strain gages shall be installed on the 2 vertical bars in the directions of pull at locations of -150 mm, -50 mm, 50 mm, 150 mm, 250 mm and 350 mm (-6 in, -2 in, 2 in, 6 in, 10 in, and 14 in) from the bottom of the column.
- 20 horizontal strain gages shall be installed on the surface of the composite casing system at the locations where strain gages were installed on the ties.
- A minimum of 12 vertical strain gages shall be uniformly installed on the surface of the composite casing system as approved by Caltrans.
- A minimum of 12 strain gages in 45° slope shall be uniformly installed on the surface of the composite casing system as approved by Caltrans.
- Lateral displacement and rotation of the top and bottom block shall be monitored throughout the test.
- Column flexure deformation measurements are preferred but not required.

6. Loading History

All test columns shall be subjected to a number of full reversed cycles of loads and displacements. Initial cycles up to 75 % of the lateral yielding force shall be carried out under load control. Two fully reversed cycles at 25 %, 50 % and 75 % of the yielding force to verify that both the load and data acquisition system. Subsequent tests beyond 75 % yielding force shall carried out under displacement control. Three fully reversed cycles shall be imposed at each ductility level of 1, 2, 3, 4, 6 and 8. If at the end of the test the column maintain more than 80 % of the peak lateral strength, a final push with the maximum of full stroke in a single direction shall be performed.

B. Confinement Effectiveness Test

To verify the confinement effectiveness, 36 standard concrete cylinders 150 mm x 300 mm (6 in x 12 in) shall be cased. Three different concrete strengths shall be used. In addition to three unconfined concrete cylinders, nine concrete cylinders shall be wrapped in a manner identical to column casing application in the field. A gap of 6 mm (0.25 in) shall be left at top and bottom of the cylinders. Any deviation from field practices shall be approved by Caltrans prior to proceeding. The composite jacket used on the cylinders shall have the same fiber volume ratio as the test columns. Three

different composite fiber area ratios[1] shall be used with the composite fiber area ratio used on the test column as the basis. The composite fiber area ratio used on the cylinders shall be 0.5, 1.0 and 1.5 times the composite fiber area ratio of the confinement enhancement test column. The composition of the aggregate shall be the same as the structure tested. A preferred concrete strength of 25 MPa, 35 MPa, and 45 MPa (3 500 psi, 5 000 psi, and 6 500 psi) shall be used.

All cylinders shall be closely monitored to obtain stress-strain relationship of the concrete in both axial and transverse directions.

General Requirements and Data Submittals

Caltrans' engineers shall be involved in all phases of the testing program. All shop drawings to construct test specimens and instrumentation plan shall be approved by Caltrans prior to construction. A testing schedule shall be submitted to Caltrans two weeks in advance. Testing shall be performed at a California university or by a qualified independent laboratory located in California and approved by Caltrans. All tests shall be performed in the presence of a Caltrans' engineer. Failure to do so will risk the possibility of the testing results not being accepted by Caltrans. Twenty copies of final test reports along with one copy of test data shall be delivered to the Caltrans' Office of Earthquake Engineering.

Part 6. Process Specification Manual

Applicants for system qualification shall furnish to Caltrans a Process Specification Manual that shall consist of a detailed description of the composite retrofit system as well as a quality assurance plan, and shall include a Standard Operating Procedure (SOP) delineating and documenting all construction procedures to be used during column retrofit with the system, including the methods and processes for preparation of progress samples.

---

[1]The ratio of volume of composite fiber jacket to total volume of core of a reinforced compression member.

Composite Column Casing – Composite column casing consists of either System 1, an epoxy E-glass fiber, composite casing with painted exterior surface, System 2, an epoxy resin-prepreg carbon fiber composite casing with painted exterior surface or Systems 3 and 4, an E-glass prefabricated, segmented composite shell assembled around the column with epoxy adhesive and with painted exterior surface.

The working drawings for composite column casing alternatives shall contain details of the dry sheet, fabric or winding thickness; the number of wraps or layers to construct the minimum composite thickness shown on the plans; fiber volume; details of joints and ends of fiber construction; details of the transition in composite thickness; plan for curing, if required; methods for coring and for fabrication of test samples; name of independent testing facility located within 500 km (300 air line miles) from both Sacramento and Los Angeles to be used to test samples and cores; 3 copies of the Process Specification Manual furnished with prequalification; and all information required for the proper construction of the system at each location including any required revisions or additions to drainage systems or other facilities. Composite casing shall be constructed by wrapping the column with layers of continuous fiber embedded in resin, or prefabricated, segmented, continuous fiber composite shells. The composite column casing for Systems 1 or 2 shall conform to the following requirements:

Properties at 22 °C ± 1 °C (72 °F ± 2 °F)	System 1	System 2	ASTM TEST METHOD***
Ultimate Tensile Strength, in primary fiber direction*, MPa, (ksi), min.	450** (65**)	1 210 (175)	D 3 039
Ultimate Strain, min.	1.8 %	0.9 %	
Tensile modulus of primary fibers, GPa, (ksi), min.	21 (3 000)	103 (15 000)	
Ultimate Tensile Strength at 90° to primary fibers, MPa, (ksi), max.	48 (7.0)	Not applicable	
Fiber volume, min.	35 %	50 %	System 1: D 2 584 System 2: D 3 171
Glass transition temperature, min.	66 °C (150 °F)	104 °C (220 °F)	D 3 418 or D 4 065
Flammability, max.	5 s	5 s	D 3 801, test per paragraph 10.5

* Horizontal fibers circumscribing the column.

** Prior to testing, samples for System 1 shall be cured at least 7 days at 24 °C ± 2 °C (75 °F ± 3 °F).

*** Subject to approval of the Engineer, other test methods, such as those published by Suppliers of Advanced Composite Materials Association (SACMA), or manufacturer's published Quality Control Procedures may be used when equivalency and suitability have been documented.

The composite column casing for Systems 3 and 4 shall conform to the following requirements:

Properties at 22 °C ± 1 °C (72 °F ± 2 °F)	System 3	System 4	ASTM TEST METHOD
Ultimate Tensile Strength, MPa, (ksi), min.	655 (95)	550 (80)	D 3 039
Ultimate Strain, min.	1.8 %	1.6 %	
Tensile modulus, GPa, (ksi), min.	31 (4 500)	34 (5 000)	
Ultimate Tensile Strength at 90° to primary fibers, MPa, (ksi), max.	75.8 (11.0)	Not applicable	
Fiber volume of composite shells, min.	45 %	45 %	System 1: D 2 584 System 2: D 3 171
Glass transition composite shells, temperature, min.	104°C (220°F)	104°C (220°F)	D 4 065

The adhesive for Systems 3 and 4 shall confirm to the following requirements:

Properties	System 3	System 4	ASTM TEST METHOD
Glass transition temperature (min. after 1 week)	66°C (150°F)	20°C (68°F)	D 4 065-93
Hardness (min. Barcol, after 1 week)	55	45	D 2 583

Fabric for System 1 shall be woven continuous E-Glass fiber filament. Carbon fibers of System 2 shall consist of polyacrylonitrile (PAN) based continuous fibers, bundled into tows and resin impregnated (towpreg). The prefabricated composite shells for Systems 3 and 4 shall be stitched fabric construction made with continuous E-glass fiber filament.

Epoxy resins for all systems shall conform to the requirements in Section 95-1, "Epoxy," of the Standard Specifications and these special provisions, except that (1) no State Specification Number will be required and (2) the epoxies shall be the same as that used in prequalification testing.

The storage and handling of materials and the construction of the composite casing for Systems 1, 2, and 3 shall be in accordance with the requirements of the approved Process Specification Manual, except as modified in these special provisions. Materials shall be protected from dirt, moisture, chemicals, extreme temperatures, and physical damage.

Surfaces to receive composite for Systems 1, 2 and 3 shall be free from fins, sharp edges and protrusions that will cause voids or depressions behind the installed casing or that in the opinion of the Engineer, will damage the fibers. Voids or depressions are defined as volumes greater than 13 mm (½ in) in diameter by 3 mm (1/8 in) deep when measured from a 30 cm (1 ft) long straight edge placed on the column surface. Existing uneven surfaces to receive composite, including voids or depressions shall be

The contact surfaces of the columns shall be completely dry at time of application of the composite. The ambient temperature and temperature of epoxy resin components shall be between 7 °C (45 °F). and 35 °C (95° F). at time of mixing and application. The composite shall be applied when the relative humidity is less than 90 % at the site and the surface temperature is more than 3 °C (5° F) above the dew point.

If, in the opinion of the Engineer, the composite is damaged by the elements it shall be replaced or repaired by the Contractor at the Contractors expense.

Subject to approval by the Engineer in writing, the Contractor may provide suitable enclosures to permit application and curing of the composites during inclement weather. Provisions shall be made to control atmospheric conditions artificially inside the enclosures within limits specified for application and curing of the composite.

Prior to application of the composites, the area of the column to be encased using Systems 1, 3, or 4 shall be completely coated with a ⅛ mm (5 mil), minimum, thick coat of system-compatible resin.

Following the application and curing of all systems, the exterior surfaces shall be completely coated with a ⅜ mm (15 mil), minimum, thick coat of resin that produces a uniform finished surface. The resin used for this cover shall be a system-compatible resin formulated to resist crazing and chipping.

Components which have exceeded their shelf life shall not be used.

Composite column casing systems shall not support combustion.

Daily Installation Data Log.–During construction of Systems 1, 2 or 3, the Contractor shall maintain a Daily Installation Data Log. The Daily Wrapping Data Log shall be available for review by the Engineer, and a copy furnished to the Engineer at completion of installation and construction for each day's production. The data log shall provide materials traceability and process records for each casing installation, and shall include all of the fol lowing information:

Casing identification with bridge number, construction and installation requirements, including plans and drawings, or references thereto.

Materials information including product description, date of manufacture, and lot or batch numbers.

Fabrication, inspection and verification data for the manufacturing and construction operations including, wrap counts, number of shells, composite thickness measurements, installation time per casing, towpreg band pitch measurements, ambient temperature and humidity readings at beginning, middle and end of each casing installation shift, curing processes including full documentation of time and temperature of curing ramping and at final curing temperature and thickness measurements of any protective coating applied to the completed composite casing following installation.

System 1: Application.–The components of epoxy resin for System 1 may be proportioned and mixed by automatic equipment. Provisions shall be made for checking the accuracy of proportions and mixing.

The composite shall be applied within one hour after a batch has been mixed.

Both epoxy resin and fabric for System 1 shall be measured accurately, combined, and applied uniformly at the rates shown on the approved working drawings.

Fabric for System 1, which is comprised of the woven fibers, shall be applied to the surface of the column by wrapping using methods that produce a uniform constant tensile force that is distributed across the entire width of the fabric.

Successive layers of composite materials for System I shall be placed before the onset of gelation of the previous layer of epoxy is too complete to achieve complete bond between layers. No more than three layers can be added to any column in one day unless approved by the Engineer

The primary fibers of the fabric for System 1 shall not deviate from a horizontal line more than 42 mm/m (½ in/ft), and the transverse fibers shall be approximately perpendicular to the primary fibers.

The epoxy application rate for each layer of composite for System I shall be such as to ensure complete saturation of the fabric. Gaps between adjoining fabric layers shall be filled with epoxy.

Undulations in the surfaces of composite column casings for System 1 shall not exceed 21 mm/m (¼ in/ft) in any direction.

Except as otherwise specified, entrapped air beneath each layer shall be released or rolled out before the epoxy sets for System 1, and each individual layer and ending of composite shall be firmly bedded and adhered to the preceding layer or substrate.

The cured composite for System shall have uniform thickness and density, bond between layers, and lack of porosity.

This system shall be protected from exposure to rainfall or water for a period of at least 5 days.

System 2: Application–Bands of towpreg for System 2 shall be applied to the surface of the column by wrapping, using methods that produce a uniform constant tensile force that is distributed across each towpreg of the band.

The primary fibers of the fabric for System 2 shall not deviate from a horizontal line more than 21 mm/m (½ in/ft).

Towpreg for System 2 shall be continuous throughout the wrap, except as required for splicing. Towpreg splice ends shall overlap by at least 380 mm (15 in). Splices shall be staggered so that the minimum distance between towpreg splices is 150 mm (6 in).

Undulations in the surfaces of composite column casings for System 2 shall not exceed 10 mm/m (⅛ in/ft) in any direction.

System 2 casing shall be completely cured at an elevated temperature. For composite casings 4 mm (0.15 in) or less in thickness, the temperature shall be monitored and controlled by devices installed at or near the

surface of the casing. For composite casings greater than 4 mm (0.15 in) in thickness, the temperature shall be monitored at both the surface and at the column to casing interface and controlled by devices installed on the surface of the composite casing.

System 3: Application.–The components for the adhesive shall be machine mixed and used without delay to thoroughly coat the bonding surfaces of the composite shells. The mixing of the 2 part adhesive shall be kept to within 5 % of the specified mixing ratio.

The entire composite shell section for System 3 shall be assembled and clamped within one hour of the initial mixing of the adhesive.

The clamping system for System 3 shall ensure close contact of the composite casing components and shall be maintained for 24 hours to complete the initial cure of the adhesive The final adhesive thickness in the composite system shall not exceed 3 mm (0.125 in). The adhesive between composite sections shall have a minimum shear capacity of 5.5 MPa (800 psi) for a 3 mm (0.125 in) bond layer in accordance with ASTM Designation: D 3165.

System 4: Application–The pre-manufactured shells shall be bonded to the column using an airless adhesive spray gun to apply a continuous film of adhesive between each aver of composite. The shells are applied in 4-foot high sets which are banded in place until the adhesive cures. Beginning at the column footing the sets are stacked vertically until the last set is cut to fit closely at the soffit of the bridge.The entire composite shell section for Systems 4 shall be assembled and clamped within 2 hours of the initial mixing of the adhesive.

The clamping system for System 4 shall ensure close contact of the composite casing components and shall be maintained for 24 hours to complete the initial cure of the adhesive The final adhesive thickness in the composite system shall not exceed 3 mm (0.125 in). The adhesive between composite sections shall have a minimum shear capacity of 5.5 MPa (800 psi) for a 3 mm (0.125 in) bond layer in accordance with ASTM D 3 165.

Job Control Tests, Inspection and Repair.--During progress of the work, in addition to inspection performed by the Engineer, job control tests shall be made on samples and cores of composite casing for Systems 1, 2 and 3, and check test cores shall be furnished to the Engineer at the Contractor's expense. Samples and cores for job control tests of composite casing (and adhesive for Systems 3 and 4) shall be fabricated or cored by the Contractor and tested at the Contractor's expense in the presence of the Engineer, unless otherwise directed. The job control testing shall be done at an independent testing facility approved by the Engineer. A copy of the job control test results shall be furnished to the Engineer within 30 days following sample fabrication and within sufficient time to allow for review by the Engineer and correction by the Contractor of any deficiencies without delaying completion of the work.

The composite samples for job control tests shall be used to verify compliance with the requirements for ultimate tensile strength, ultimate elongation, and tensile modulus of the composite column casings. The composite samples shall consist of 2-ply laminates for System 1 3-ply laminates at 12 tows per inch of width per lamination for System 2 and flat plates made at the factory by the same resin infusion as the column shells with manufacturing documentation for Systems 3 and 4. At least four test specimens will be made by applying adhesive to the flat plates in the field to test the bond strength of the adhesive in accordance with ASTM Designation: D 3165. The test specimens shall be provided throughout the duration job at intervals

determined by the Engineer. The test specimens shall have a minimum of 5.5 MPa (800 psi) in lap shear. Each sample of composite shall be at least 0.37 m^2 (4 ft^2) in total area for each type of composite to be used, and may consist of one piece or individual pieces not less than 305 mm x 305 mm (12 in x 12 in) in area. One sample of each day's production of column casing shall be tested. Each composite sample shall be manufactured and cured in the same manner as composite used in the field installation.

The composite casings for all Systems shall at least the number of wraps and thickness as shown on the plans, and shall conform to the requirements for fiber volume and glass transition temperature for composite column casings. These dimensions and properties shall be verified, after application and cure. by taking 13 mm (0.5 in) diameter cores from the composite for job control testing. One job control core shall be taken by the Contractor on every tenth composite casing or as determined by the Engineer. One check test core shall be taken by the Contractor and furnished to the Engineer for testing for each column at a location determined by the Engineer Care shall be taken during coring operations to ensure that undamaged cores are obtained, and that minimal damage occurs to the adjacent composite and column. All cores shall be placed in labeled and sealed polyethylene bags prior to shipment to the testing facility or furnishing to the Engineer. Core holes shall be filled with a system-compatible resin and smoothed flush prior to painting the composite casing.

When Systems 3 and 4 are used, a sample of the adhesive delivered by the mixing machine each day shall be used to verify compliance of the adhesive system with requirements for hardness and T_g after at least 7 days ambient cure at the job site. The sample shall consist of adhesive cast into one sheet of minimum dimensions 3 mm x 152 mm x 152 mm (1/8 in x 6 in x 6 in). Each adhesive sample shall be manufactured and cured in the same manner as adhesive used in the field installation. One sheet of the daily adhesive samples shall be cast by the Contractor and furnished to the Engineer for testing at a location determined by the Engineer. All sheets shall be placed in labeled and sealed polyethylene bags prior to shipment to the testing facility or furnishing to the Engineer.

Should the results of tests for Systems 1, 2 and 3 on the samples or cores in any job control test fail to comply with these specifications, the composite casing represented by that test will be rejected in accordance with the provisions in Section 6-1.04, "Defective Materials," of the Standard Specifications.

Composite column casings shall be constructed in a manner consistent with the best commercial practices. The cured composite material encasing columns will be inspected for defects consisting of external abrasions or blemishes, delaminations, voids, external cracks, chips, cuts, loose fibers, foreign inclusions, depressible raised areas, or fabric wrinkles. The following criteria shall apply:

> All defects with a dimension greater than 38 mm (1.5 in), defect areas greater than 645 mm^2 (1.0 in^2), or defect areas with any dimension greater than 25 mm (1 in) within 300 mm (1.0 ft) from another defect area of similar size, shall be repaired or replaced as determined by the Engineer.

Any voids larger than 6 mm (1/4 in) shall be filled by injection with a system- compatible resin.

Preparing Surfaces and Painting Composite Casing.--Exposed surfaces of composite casing for Systems 1, 2 and 3 including surfaces below ground, shall be cleaned and painted in accordance with the provisions in Sections 59-1, "General," and 9 1, "Paint," of the Standard Specifications and these special provisions.

The surfaces to be cleaned and painted shall be lightly roughened by uniform abrasive blasting using an abrasive no larger than 80 mesh. The air pressure at the nozzle used for abrasive blasting shall not exceed 550 kPa (80 psi). The abrasive shall be of appropriate hardness to roughen the surface without damage to the fiber portion of the composite. The fiber portion of the composite shall not be exposed by the abrasive blasting operation. Abrasive blasting will not be required for System 1 if the first coat of paint is applied no sooner than 24 hours and within 72 hours after mixing the components for the final 0.38 mm (15 mil) resin coating.

Dust and residue shall be removed from all surfaces by flushing with clean water before painting.

All cleaned and roughened surfaces of the composite casing shall be completely dry before receiving a minimum of 2 finish coats of an exterior grade paint that is formulated to be system-compatible with the composite in accordance with ASTM D 3 359, Method A, with a minimum rating of 4A. The first finish coat shall be applied in 2 applications. The total dry film thickness of all applications of the first finish coat shall be not less than 0.05 mm (2 mils).

Successive applications of paint shall be of such a shade as to contrast with the paint being covered.

Except as approved by the Engineer, a minimum drying time of 12 hours shall be allowed between finish coats.

The second finish coat color shall match Federal Standard 595B No. 26 408. The total dry film thickness of all applications of the second finish coat shall be not less than 0.05 mm (2 mils).

The 2 finish coats shall be applied in 3 or more applications to a total dry film thickness of not less than 0.10 mm (4 mils) or more than 0.20 mm (8 mils).

MEASUREMENT AND PAYMENT.--Alternative column casing will be measured by the square foot. The quantity to be paid for will be the area of the existing concrete column surface to beencased by the casing alternative shown on the plans.

The contract price paid per unit area for the various types of alternative column casing shall include full compensation for furnishing all labor, materials, tools, equipment, and incidentals and for doing all the work involved in furnishing and constructing alternative column casings complete in place, including removing and disposing of plants and other materials. removal of fins, sharp edges and protrusions and filling of voids in casinos or depressions in surfaces to receive composite, job control testing, and cleaning and painting column casings as shown on the plans, as specified in the Standard Specifications and these special provisions, and as directed by the Engineer.

Full compensation for any additional testing, materials, enclosures, or work required because of the use of a particular kind of column casing shall be considered as included in the contract price paid per unit area for the alternative column casing, and no additional compensation will be allowed therefor.

Excavation and backfill at locations where the column casing is below the ground limits shown on the contract plans or original contract plans shall be required as directed by the Engineer and such work will be paid for as extra work as provided in Section 4-1.03D of the Standard Specifications.

DESIGN CONSIDERATIONS FOR THE USE OF FIBER REINFORCED POLYMERIC COMPOSITES IN THE REHABILITATION OF CONCRETE STRUCTURES

V.M. Karbhari[1] and F. Seible[2]
Division of Structural Engineering, MC-0085
University of California, San Diego
La Jolla, CA 92093

ABSTRACT

Due to the high strength-to-weight and stiffness-to-weight ratios, corrosion resistance, light weight and potentially high durability, fiber reinforced polymer matrix composites (PMCs) are very attractive for use in civil infrastructure. Recently, their use has increased in the rehabilitation of concrete structures, due mainly to their tailorable performance characteristics, ease of application, and potential low life-cycle costs. This paper presents materials and design considerations for the use of fiber reinforced composites in the rehabilitation of concrete structures, and offers an approach to the development of a robust design methodology for future use of such materials.

1. INTRODUCTION

Fiber reinforced polymer matrix composites (PMCs), also known as fiber reinforced polymers (FRPs), are increasingly being considered for use in civil infrastructure for applications ranging from replacement for steel rebar and cables, to use in the rehabilitation of concrete structures, and for new structural components and systems. These applications can be divided into two general areas, namely structural rehabilitation to extend/enhance the service life of existing structures, and new structural members and complete systems. Over the past few years, there has been a dramatic increase in the use of both carbon- and glass-fiber reinforced PMCs for rehabilitation world-wide, driven largely by the interest in seismic retrofitting of bridge columns and the strengthening of beams and slabs. Although a large number of the early projects could be considered to be demonstrations, the technology is now at a point where its future use will depend primarily on the availability of validated design guidelines based on accepted performance criteria and on their economic competitiveness with conventional methods of rehabilitation. The myriad possibilities of reinforcement and resin combinations, and processing paths possible with PMCs make it important that the guidelines include procedures for materials selection and application. The need for performance based specifications coupled with materials guidelines, performance based design procedures, and systems for monitoring of quality control and structural response is clearly apparent.

---

[1] Associate Professor
[2] Professor and Chair

Within the scope of rehabilitation of concrete structures, it is essential that we differentiate between repair, strengthening and retrofit, terms which are often erroneously used interchangeably, but which in fact refer to three different structural conditions. In "repairing" a structure, the composite material is used to fix a structural or functional deficiency such as a crack or a severely degraded structural component. In contrast, the strengthening of structures is specific to those cases wherein the application/addition of the composite would enhance the existing designed performance level, as would be the case in attempting to increase the load rating (or capacity) of a bridge deck through the application of composites to the deck soffit. The term retrofit is specifically used as related to the seismic upgrade of facilities, such as in the case of the use of composite jackets for the confinement of columns. The differentiation is important not just on the basis of structural functionality, but also because the specifics related to the use of the material and its expected life have a significant effect on the selection (or rejection) of fiber-resin combinations from a variety of alternatives.

Hence, the objective of using composites for the rehabilitation of concrete structures is to restore or enhance the functionality and/or safety of existing structural components or systems. In keeping with this, rehabilitation measures must be designed such that within the intended period of operation and cost, (i) the structures remain functional with an accepted probability, and (ii) they are capable of sustaining all actions and influences likely to occur and have adequate durability with an appropriate degree of reliability. The purpose of this paper is to briefly address measures related to design considerations, materials capacity reduction factors, and design detailing for composites used in the rehabilitation of concrete structures.

2. DESIGN CONSIDERATIONS

In considering the rehabilitation of structures, it is important to keep in mind that structures must be designed to have reasonable safety margins, and must provide adequate warning of failure prior to reaching an ultimate limit state. Although this may appear to be redundant to most civil structural designers, it is stressed that unlike reinforced concrete members which show a ductile response to loading, composite structures for the most part are linear elastic to failure and fail catastrophically without significant warning. Design considerations must thus not only address the mechanical short- and long-term response of the composites and the characteristics of the bond between the composite and the concrete substrate [Karbhari, 1996], but must also address the combined response of the new structural system in terms of stiffness, service load behavior, overload response and failure modes. Although composites offer the ability to conform to a variety of shapes and to be applied to almost any surface, it is important that rehabilitation measures follow good conventional concrete design practice.

As with conventional materials, performance levels related to strength, stiffness and ultimate strain are important, and a comparison of representative properties of carbon fiber (AS4 or T300 type), E-glass fiber, carbon fiber composite, concrete and grade 60 steel is shown in Table 1. It should be noted, however, that unlike reinforcing steel, some reinforcing fibers such as carbon fibers are anisotropic, having different properties in the longitudinal (i.e., along the length of the fiber) and transverse directions. For example although the tensile modulus for T300

type carbon fibers in the longitudinal direction is 230 GPa, in the transverse direction it is only about 40 GPa, a fact that must be considered when designing with fibers or fabrics that have to conform to tight radii and corners. In the case of aramid fibers, the structure tends to fibrillate (break up into fragments/fibrils) on the compression side, again emphasizing the need for special consideration around edges and corners. Furthermore, although the carbon fiber has a negative coefficient of thermal expansion in the axial direction, it has a value of + 10 x 10^{-6} /°C in the transverse direction.

Table 1: Comparison of Representative Properties of Materials

Property	Concrete	Grade 60 Steel	E-Glass Fiber	Carbon Fiber	Carbon/Epoxy Composite (V_f = 60%)	
					Fiber Direction	90° to Fiber Direction
Density (g/cm^3)	1.6	7.8	2.54-2.62	1.75-1.80	1.6	1.6
Tensile Modulus (GPa)	2.5	200	72.5	230	160	10
Tensile Strength (MPa)	3.5	400 (Yield level)	3450	3000	1725	40
Strain to Break	-	0.2 % (Yield level)	3 % to 5 %	0.9 % to 1.5 %	1.1 %	1.5 %
Poisson's Ratio	0.2	0.3	0.15-0.26	0.2	0.22-0.28	0.015-0.02
Thermal Conductivity [W/(m ° K)] at 23 °C	-	-	1.2-1.4	7.0-8.5	11-18	2-3
Coefficient of Thermal Expansion (x 10^{-6} /°C)	10	12	5	-0.4	0.02-0.04	20

Although composite materials have significantly higher strength levels, it is important to note that the limit of use is often dictated by strain limitations. One such example is in the use of composite jackets for the seismic retrofit of columns for the shear failure mode. This is primarily a strength and dilation problem. Shear strength can be added to concrete columns through the addition of hoop reinforcement in the form of fibers oriented at 90° to the column axis, such that the opening of inclined cracks, and with it the loss of aggregate interlock can be controlled by limiting the column dilation in the loading direction to experimentally determined dilation strains of 0.4 % [Priestley et al., 1996]. It is clear that this severely restricts the utilization of the high strengths of the composite materials (glass or carbon reinforced). It is also noted that the required thickness of jackets for retrofit in the case of shear strengthening, flexural hinge confinement, lap splice clamping, and bar buckling restraint can all be derived through proportionality relationships that are based on combinations of modulus in the hoop direction, strength, and ultimate strain of the material as given in Table 2.

Table 2: Comparison of Hypothetical Jacket Thicknesses

System	Mechanical Characteristics	Normalized Jacket Thickness			
		Shear Strength	Plastic Hinge Confinement	Bar Buckling Restraint	Lap Splice Clamping
Proportionality Relationship		$t_j^v \sim \frac{1}{E_j D} \times C_v$	$t_j^c \sim \frac{D}{f_{ju}\varepsilon_{ju}} \times C_c$	$t_j^b \sim \frac{D}{E_j} \times C_b$	$t_j^s \sim \frac{D}{E_j} \times C_s$
System A	E_j = 124 GPa f_{ju} = 1,380 MPa ε_{ju} = 1%	1	1	1	1
System B	E_j = 76 GPa f_{ju} = 1,380 MPa ε_{ju} = 1.5%	1.6	0.7	1.6	1.6
System C	E_j = 21 GPa f_{ju} = 655 MPa ε_{ju} = 2.5%	6.0	0.9	6.0	6.0

1 MPa = 0.145 ksi, 1 GPa = 145 ksi

System A is representative of a towpreg based graphite/epoxy composite similar to that used in automated winding of jackets, system B is representative of a Kevlar/epoxy composite, and system C is representative of an E-glass/Vinylester composite similar to that used in prefabricated adhesively bonded shells. All values in Table 2 are normalized to the thickness values derived for System A which represents the unidirectional prepreg carbon tow winding system with an epoxy matrix. It can be seen that jacket thicknesses for shear, bar buckling restraint and lap splice clamping are driven by the modulus of the jacket in the hoop direction, which favors higher modulus materials, whereas the flexural plastic hinge confinement can also efficiently be achieved with a lower modulus and higher strain capacity material. It is important to note that the characteristic properties listed in Table 2 have not been modified to account for deviations in properties accruing from materials variations, aging and deterioration, or process effects. In actuality the application of factors accounting for these effects is critical to the determination of actual values used in design.

A variety of jacketing systems currently exist and can be differentiated into five basic types based on the method of processing/installation (Fig. 1), including the use of: (a) the wet lay-up process using fabric, tape or individual tow, (b) prepreg in the form of tow, tape or fabric, (c) prefabricated shells, (d) resin infusion processes, and (e) external composite cables. The wet lay-up process is generally associated with manual application and the use of ambient cure, although it is possible to heat the system after application to achieve higher cure temperatures and hence higher T_g. In the case of wet-winding of tow or tape, the process may be automated, although resin impregnation is still through the use of a wet bath and/or spray. The use of prepreg material generically uses an elevated cure, with the winding process for tow and tape being automated, and the fabric process being manual in terms of lay-down. In the case of prefabricated shells, the sections are fabricated in a factory and then adhesively bonded in the field so as to form the jacket. In the case of resin infusion, the dry fabric is applied manually and resin is then infused using a vacuum with cure being under ambient conditions. Irrespective of

the method used, it is important to note that aspects related to material form (tow, dry fabric, impregnated fabric etc.), processing (lay-up, cure, etc.), and location of fabrication (field versus prefabricated) will have an effect on the final performance and longevity of the material system in use.

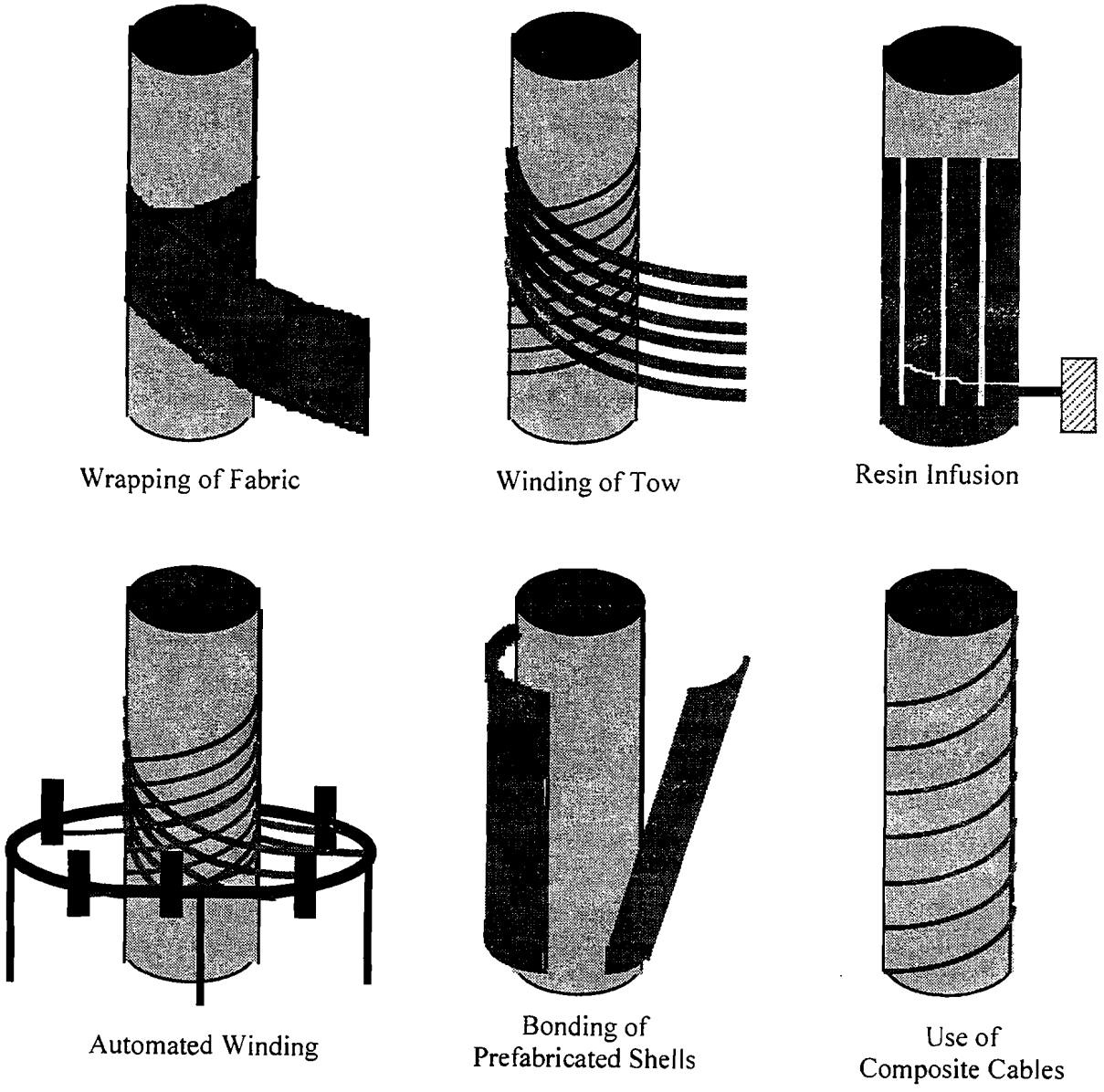

Figure 1: Schematic of Processes for the Fabrication of Jackets for Seismic Retrofit of Columns

The use of composites for the strengthening of beams and slabs through its application on the bottom surface or soffit is another attractive use of composites. Although rather simple in concept, the method depends largely on the integrity of the bond developed between the composite and concrete substrate, and on the efficiency of stress transfer between them. Aspects related to design details of this method are described in section 4, and aspects related to potential failure modes and degradation are described in Karbhari et al [1997], Karbhari and Zhao [1997].

It is important, however, to emphasize that the efficacy of this system is affected significantly by the method of fabrication of the composite layer used for strengthening. The "plate" (or external reinforcement) can itself be fabricated in three generic ways as listed in Table 3.

Table 3: Methods of Application of External Composite Reinforcement for Strengthening

Procedure	Description
Adhesive Bonding	Composite strip/panel/plate is prefabricated and cured (using wet lay-up, pultrusion, or autoclave cure) and then bonded onto the concrete substrate using an adhesive under pressure.
Wet Lay-up	Resin is applied to the concrete substrate and layers of fabric are then impregnated in place using rollers and/or squeegees. The composite and bond are formed at the same time.
Resin Infusion	Reinforcing fabric is placed over the area under consideration and the entire area is encapsulated in a vacuum bag. Resin is infused into the assembly under vacuum with compaction taking place under vacuum pressure. Unlike the wet lay-up process, this is a closed process and the infusing resin can fill cracks and voids as well. In a variant the outer layer of fabric in contact with the vacuum bag is partially cured prior to placement in order to ensure a good surface.

Of these, the pre-manufactured alternative shows the highest degree of uniformity and quality control, since it is fabricated under controlled conditions. Application, and efficiency in use are still predicated by the use of an appropriate adhesive and through the achievement of a good bond between the concrete substrate and the composite adherent. Care must be taken to ensure that the adhesive is chosen to match as closely as possible both the concrete and composite vis-à-vis their elastic moduli and coefficients of thermal expansion, while providing an interlayer to reduce mismatch induced stresses. The wet lay-up process is perhaps the most used and gives the maximum flexibility for field application, and is probably also the cheapest alternative. However, it presents the most variability and necessitates the use of excessive resin, and could result in the wrinkling or shear deformation of the fabric used, decreasing its designed strengthening efficiency. Also the process carries with it the intrinsic entrapment of air voids, and the resulting potential for deterioration with time. The composite formed in this case is generally cured under ambient conditions. The in-situ resin infusion method is a fairly new variant and is capable of achieving uniformity and good fabric compaction, while making it easier for the reinforcement to be placed without excessive un-intended deformation. In the last two methods discussed above, the function of the adhesive is taken by the resin itself with the bond to the concrete substrate being formed simultaneously with the fabrication of the composite. This is both an advantage and a disadvantage, since the elimination of the third phase in the system, the adhesive, results in the formation of fewer interfaces at which failure could occur, but also eliminates the use of a more compliant layer.

3. CAPACITY REDUCTION FACTORS

In designing with composites it is important to keep in mind that although PMCs are attractive for use in a civil engineering environment because of their high strength-to-weight and stiffness-to-weight ratios, corrosion resistance, and chemical inertness, systems of the type that would be used have incomplete data records and must be treated as emerging materials. This is specifically true of the lower and ambient temperature cure systems involving polyesters, vinylesters and some epoxies, which do not have the well established databases generated by DoD sponsored research such as the AS4/3501-6 or 5208 based systems. It is thus important that designers consider the uncertainty in these materials based on aspects related to data generation, materials characteristics (as related to long- and short-term durability) and processing routes, and furthermore that these be considered within the context of the LRFD design philosophy now adopted by AASHTO for bridge design with conventional materials [AASHTO 1994]. Using this approach it is proposed that the design value for a material be determined as

$$F_d = \phi F_k$$

where F_k is the characteristic value, and ϕ is the derived partial safety (or knock down) factor, derived on the basis of effects related to materials and processing. It is proposed that at the ultimate state

$$\phi = \phi_{mat} * \phi_{proc} * [(\phi_{cure} + \phi_{loc})/2] * \phi_{degr}$$

wherein ϕ_{mat} is used to account for the deviation (and/or level of uncertainty) of material properties from the specified characteristic values, ϕ_{proc} is used to account for variation due to the processing method used, ϕ_{cure} is used to account for variation in properties due to the degree of cure achieved, ϕ_{loc} is used to account for the uncertainty in performance level due to the location of processing, and ϕ_{degr} is used to account for changes in material properties over time and due to environmental effects. It should be noted that effects due to cure and location are averaged since there is a substantial degree of interaction. Proposed values for ϕ_{mat} , ϕ_{proc} , ϕ_{cure} , ϕ_{loc} , and ϕ_{degr} are given in Tables 4-8 respectively.

Table 4: Values for Factor Based on Derivation of Material Properties (ϕ_{mat})

Value	Description
0.50 - 0.80	Properties based on constituent material test data and lamina and laminate properties derived from theory.
0.67 - 0.90	Properties for individual plies derived from tests and laminate properties derived from theory.
0.85 - 0.97	Properties derived from laminate or structural tests.

The levels proposed in Table 4 for ϕ_{mat} consider the differences due to the level or type of testing, as well as the approximations inherent in bridging theoretically derived and experimentally determined data. This procedure also allows for the uncertainty in using coupon level materials data for characteristics that must account for structural rather than mere materials response, such as in the case of composites jackets used for seismic retrofit of columns, wherein the NOL (Naval Ordnance Laboratory) ring test (see pp. 3.80-81) provides data that is much

more suitable for structural characterization, than the flat coupon test which provides materials properties.

Table 5: Values for Factor Based on Processing Method Used (ϕ_{proc})

Value	Description
0.95 – 1.0	Prepreg based autoclave cure
0.95 – 1.0	Prepreg based filament winding
0.85 - 0.95	Wet-winding
0.75 - 0.80	Wet Lay-up of Fabric (Vacuum Bag)
0.60 - 0.75	Wet Lay-up of Fabric (Unbagged and without vacuum)
0.70 - 0.95	Pultrusion
0.75 - 0.87	Resin Transfer Molding (RTM)
0.70 - 0.85	Resin Infusion
0.60 - 0.65	Spray-Up

The levels proposed for ϕ_{proc} in Table 5 acknowledge that it is possible to process/fabricate composites using the same constituent materials (fiber, resin and filler) but that the properties may vary due to the choice of process used. For example, it is well known that the degree of compaction achievable through the use of a wet lay-up is less than that achievable through the use of an autoclave or RTM based process. Furthermore, the use of a spray-up process is likely to lead to a higher degree of void entrapment and non-uniformity than any other process and hence in comparison with composites fabricated through other processes, performance characteristics can be expected to be lower.

Table 6: Values for Factor Based on Type of Cure Applied (ϕ_{cure})

Value	Description
1	Autoclave cure
0.90 – 1.0	Elevated temperature controlled cure process
0.80 - 0.95	Ambient cure

The range of values used in Table 6 discriminates between composites on the basis of cure achieved. For most resin systems, cure through the use of an ambient cure procedure results in a lower degree of polymerization and a lower glass transition temperature, than one achieved through the use of an elevated temperature controlled or autoclave cured process. This serves as a more generic method of differentiating and factoring composites than on the basis of heat deflection temperature and temperature of use, which is subjective as related to location and extent of heat transmission over the period of time under consideration.

In addition to the method of cure utilized, the quality control of a composite can be largely affected by the location in which the composite is fabricated, since aspects such as moisture, temperature variation, humidity, and the presence of contaminants can greatly affect the process and the resulting properties. It should be remembered that almost all of the "high-performance" and "qualified" composites processed for use in aerospace applications were

fabricated in controlled factory conditions which limited contamination and variability. In contrast, it is expected that a large number of civil infrastructure applications related to rehabilitation will be conducted in the field with little to no actual control over the surrounding environment, making the consideration of location an important factor.

Table 7: Values for Factor Based on Location of Manufacturing/Construction (ϕ_{loc})

Value	Description
1	Controlled factory environment
0.90 - 0.95	Uncontrolled field environment within an enclosure
0.80 - 0.90	Field environment without an enclosure

ϕ_{loc} is an important factor for consideration in a civil engineering environment where fabrication may either be in a factory or in the field. Obviously, it is assumed that quality and uniformity of composites is higher in the factory environment than in the field.

Table 8: Values for Factor Based on Materials Degradation/Aging (ϕ_{degr})

Material System	Short-Term	Long-Term
E-Glass composite	0.60 - 0.80	0.30- 0.50
S-Glass composite	0.75 - 0.90	0.55 - 0.80
Carbon composite	0.95 - 1.00	0.70 - 0.90

The ranges used in Table 8 attempt to bound the response of E-glass, S-glass, and carbon fiber reinforced composites for both short-term and long-term loading. It is implicitly assumed that the fiber is appropriately sized so as to achieve good wet-out and bond with the composite. The use of carbon fibers in a vinylester composite is currently not recommended due to poor adhesion resulting in significantly lower properties in compression and shear over time or at elevated temperatures. There are also concerns related to the use of glass fibers with isopolyester resins wherein the addition of wax in the formulation of the isopolyester is known to result in fiber-matrix debonding and changes in failure mechanisms after exposure to water. Another method of developing these factors is discussed in [Karbhari and Seible, 1997] but requires the development of significant fatigue or creep data.

In using these factors it is important to note that, in general, for unidirectional composites the strength and strain-to-failure of composites degrades over time, whereas in most cases the modulus either remains constant or degrades to a small extent. The user is thus cautioned against using these levels without recognition of the structural characteristic that is critical, i.e. is the design strength based, stiffness based etc., or whether resin integrity is important. Since the combined effects of the parameters listed above are evaluated through the use of products, it is essential that upper and lower limits be set for the use of these factors. Based on experimental observation and practice, it is proposed that the upper limit be 0.97, and the lower limit be 0.25. It can be seen that the lower limit corresponds to the well known factor of safety 4 used

conventionally in the design of composites for marine structures based on the threshold for creep rupture of glass-fiber reinforced composites.

The above factors are intended to serve as guidelines only and to be used in cases where sufficient data does not exist to derive design characteristic values for materials based on actual tests. However, it is not expected that materials used in civil infrastructure applications will be qualified in the same manner as those in the aerospace industry (incorporating numerous tests with significant number of repetitions in order to arrive at good statistical bases for design), and hence variation between specimens should be expected and the probability included in design through the use of these partial safety factors.

4. DESIGN DETAILING

Because composites can be easily applied to concrete structures either through in-situ fabrication on the structure itself or through the adhesion of prefabricated panels or strips, there is a tendency to follow with the composite the contours of the element to be rehabilitated, without sufficient thought given to the consequences of such actions. Examples of some detailing practices are given in Figures 2-6, wherein methods of application of composites for rehabilitation of existing concrete structural elements are compared to those used in the construction of new conventional concrete structural elements. In each figure the (-) depicts an incorrect practice, and a (+) denotes the correct detailing practice for the use of composites.

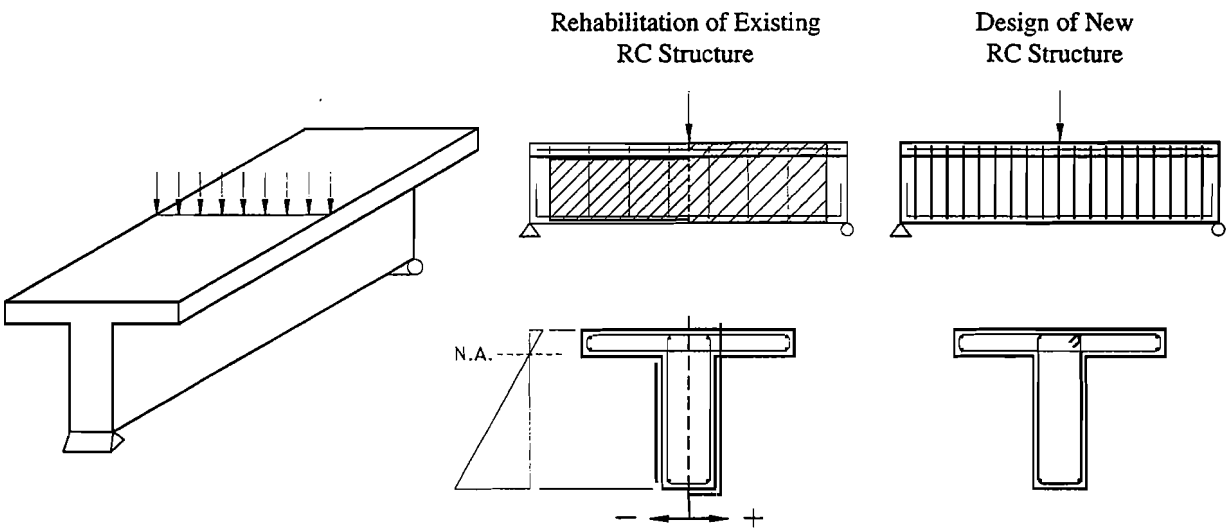

Figure 2: Design detailing for Shear Strengthening of T-Beams

A common example of the misuse of ease of conformance is shown in Figures 2 and 3 wherein composites are used for the shear strengthening of T and I-beams, respectively, through the covering of the beam on its sides and bottom by FRP fabric. As can be seen in the right hand side of Figure 2, in new conventional concrete construction, shear stirrups are not curtailed in the beam region, but are carried over into the slab section to be anchored in the compression zone and to provide the sought after truss mechanism.

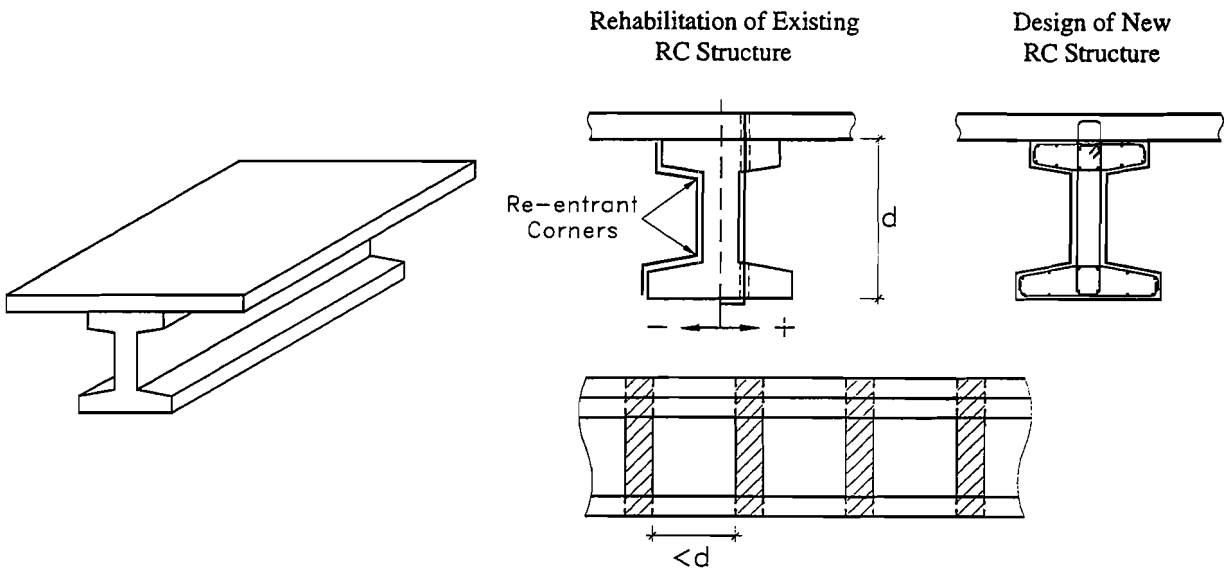

Figure 3: Design detailing for Shear Strengthening of I-Beams

When composites are curtailed in the vertical section below the slab, there is a distinct possibility that the composite will debond or delaminate at the bottom corner and along the vertical edge below the slab, significantly reducing safety and reliability margins. For good detailing, the composite should be continued directly into the slab and then anchored in that region.

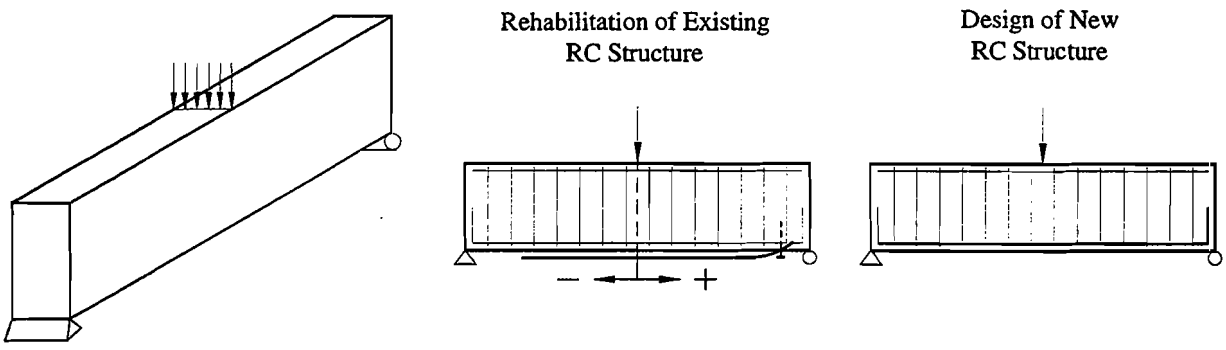

Figure 4: Design detailing for the flexural strengthening of beams

Composite plates are routinely adhesively bonded to the bottom of beams in order to strengthen beams flexurally as shown in Figure 4. This, however, disregards the fact that the presence of the discontinuity causes very high shear stresses at the end of the composite plate resulting in peel stresses and ultimate failure due to premature debonding of the plate/strip from the concrete. Appropriate detailing should follow the procedure prescribed for internal rebar which would be carried through to the support. FRP strengthening can be developed through partial embedment of the composite in the concrete so as to provide anchorage and stress buildup

over its length and, in case termination short of the support region is required, strict limits on the maximum allowable strength / capacity enhancement should be introduced.

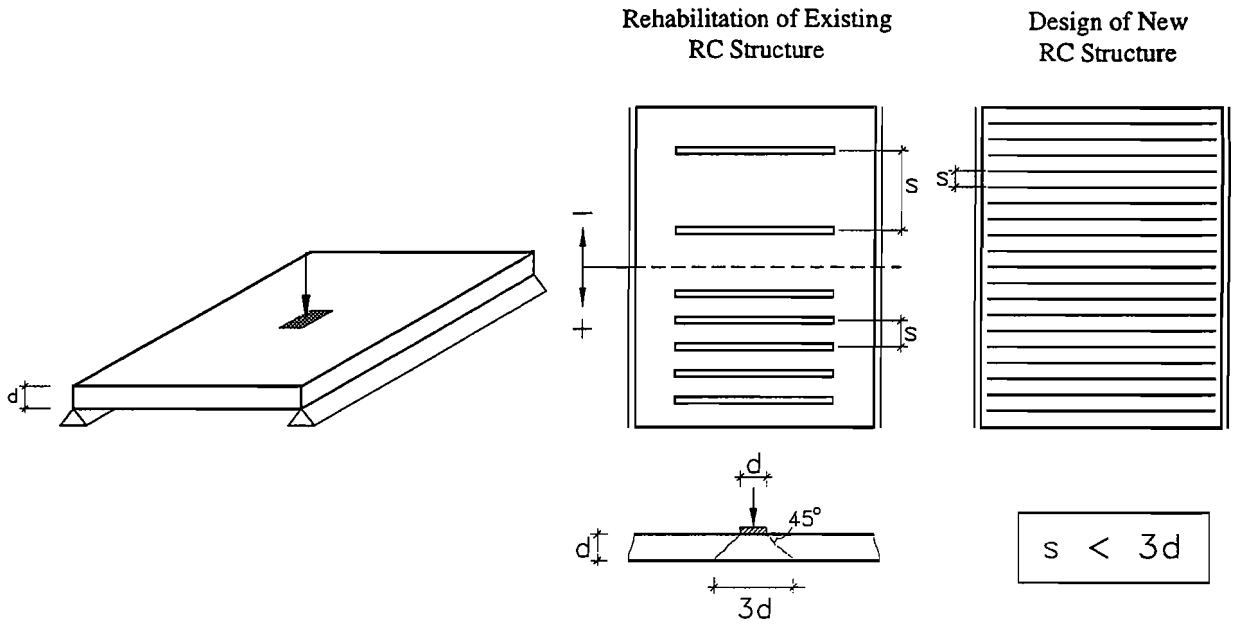

Figure 5: Design detailing for the flexural strengthening of slabs

The successful application of composites to the bottom surface of beams has resulted in some use of strips on the soffits of slabs with strips being adhesively bonded to the soffit at wide spacing. Again this is poor detailing practice due to shear lag between tension and compression mechanisms and since it allows for punching shear failure in the large unreinforced gaps between the external composite strips as shown in Figure 5. Correct procedure would be to place the strips closer together similar to the placement of internal steel rebar or to use continuous fabric over the entire soffit.

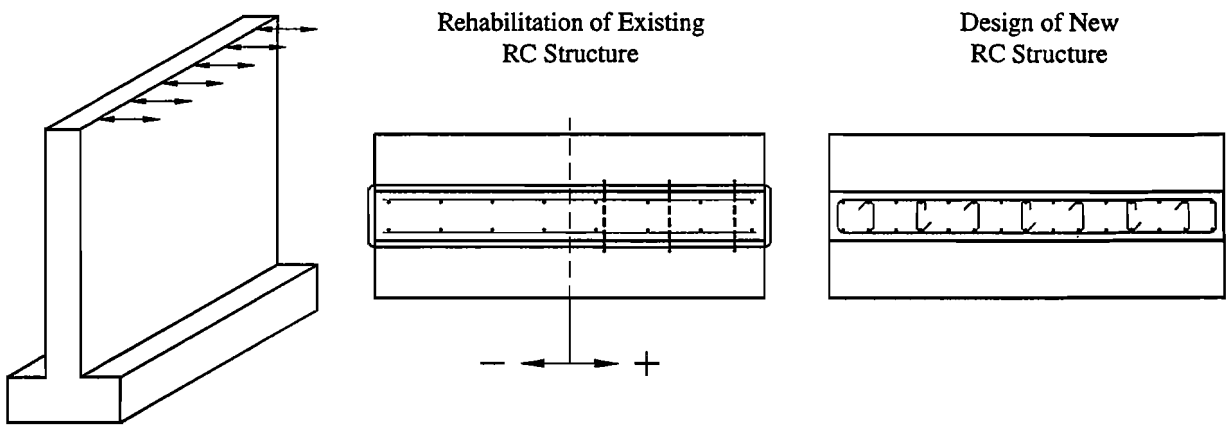

Figure 6: Design detailing for the seismic retrofit of rectangular columns/pier walls

Composite sheets can be easily applied to large aspect ratio rectangular columns or pier walls. However due to the long length between corners, the composite does not in actuality

confine the internal concrete structure if just applied to the surface. In order to achieve confinement, the composite wraps need to be constrained on both sides along the length through the use of dowels or bolts that anchor the composite to the pre-existing structure, thereby creating shorter distances which are confined between bolts. This is actually similar to the technique used in conventional construction (Figure 6) wherein the transverse reinforcement on the two side faces is tied together through the use of J-hooks.

As a general rule, external FRP rehabilitation measures on concrete structures should emulate conventional internal reinforcement detailing as much as possible. In cases where this is not practical, strict limitations on the **allowable** capacity enhancement for the rehabilitation measure should be applied. It is noted, that in the majority of applications completed in Switzerland, the enhancement of strengthening is restricted to a 50% increase so as not to exceed the safe allowable capacity of the original structure.

5. SUMMARY AND CONCLUSIONS

The use of fiber reinforced composites for the rehabilitation of concrete structural elements requires that appropriate design detailing be used and that the design be conducted using a methodology that ensures appropriate use of the material. It is essential that design values for materials be determined from characteristic values through modification based on the specifics of constituent materials and processes used, and based on potential for aging/deterioration of the material or rehabilitation system. Design detailing is also important and if not attended to will lead to premature and often catastrophic failure of the rehabilitated structure. Although composites present immense opportunity for rapid completion of rehabilitation procedures without significant increases in thickness of existing components, or changes to the structural profile, it is critical that ease of use and application not translate to poor detailing practice. Composites must be applied in such a way that they conform to conventional practice applicable to reinforcement placed internal to the concrete. Furthermore, although the application of composites can result in significant enhancement of performance, care must be taken to ensure that failure be gradual and non-catastrophic, and that the actual capacity of existing structures is not exceeded.

REFERENCES

AASHTO, American Association of State and Highway Transportation Officials, *AASHTO LRFD Bridge Design Specifications*, First Edition, Washington, D.C., 1994

KARBHARI, V.M. Issues in Joining of Composites to Concrete - Rehabilitation and Retrofit, *Proceedings of Composites '96*, Manufacturing and Tooling, Anaheim, CA, January 22-24, pp. 345-363, 1996.

KARBHARI, V.M. and SEIBLE, F. Durability and Systems Level Design Guidelines for the Use of Fiber Reinforced Composite Reinforcement in Civil Infrastructure, *Proceedings of the Third International Symposium on Non-Metallic (FRP) Reinforcement for Concrete Structures*, Sapporo, Japan, pp. 191-198, 1997.

KARBHARI, V.M., ENGINEER, M. and ECKEL, D,A., II. On the Durability of Composite Rehabilitation Schemes for Concrete: Use of a Peel Test, *Journal of Materials Science*, Vol. 32, pp. 147-156, 1996.

KARBHARI, V.M. and ZHAO, L. Issues Related to Composite Plating and Environmental Exposure Effects on Concrete-Composite Interface in External Strengthening, *Composite Structures*, in press, 1998.

PRIESTLEY, M.J.N., SEIBLE, F. and CALVI, G.M. Seismic Design and Retrofit of bridges, John Wiley & Sons, Inc., 1996.

INDUSTRY PERSPECTIVE ON COMPOSITE RETROFIT SPECIFICATIONS

F. Policelli, L. Cercone, G. Ma , XXsys Technologies Inc.
and R. Johns, Thiokol Aerospace and Industrial Technologies

State and federal governments have invested millions of dollars in developing and validating composite materials for infrastructure renewal. This effort is a strategic part of the diversification of defense materials and technologies via the California Trade and Commerce Agency, Advanced Research Project Agency, National Institute of Standards and Technology and Federal Highway Administration. In a report to Congress by the Federal Highway Administration in 1995, about 18 % of our Nation's bridges are classified as structurally deficient, with a cost to fix these deficiencies estimated at $80 billion. Similar deficiencies exist in Europe, Asia and the Middle East. The global market for infrastructure renewal is enormous. We know that composites, when properly applied, can provide cost effective solutions due to their high strength-to-weight ratios, non-corrosive properties and speed and ease of application. The success of these government-funded programs equates to global competitiveness and increased tax revenues for years and even decades to come. Consequently, we all have a vested common interest in the successful implementation of these technologies and materials.

Infrastructure renewal has been under way for several years, and of particular interest has been the retrofit of bridge piers with high performance composite casings. Current specifications for composite casings have been in development for several years and are still somewhat fragmented. Considering the enormous potential application of composite casings, it becomes very apparent that these specifications need to be reviewed and improved.

Improvements can be made to the Caltrans Pre-Qualification Requirements, Durability Testing Procedures, and Column Casing Specifications (see Appendix 3.1b of Roberts's paper in this volume). For example, the material property aspects of the pre-qualification requirements presently in use by Caltrans contain several test procedures which do not correspond to actual modes of material resistance and failure found in the field. This paper discusses some of the more important issues in this regard.

PRE-QUALIFICATION REQUIREMENTS:

Ring versus Flat Specimens: Pre-qualification for existing materials requires that testing be performed on specimens derived from flat laminate samples of the composite system. In all cases of pre-qualification of composite column casings to date, flat laminate plates have been used for material qualification, durability testing and residual strength determination. The flat plates are cut into specimens, which are tested in accordance with ASTM standards such as D 3039, D 3165 and D 2344. Yet, the flat laminate specimen is not representative of either the manufacturing process or the structural loading condition in the field. In fact, the use of flat specimens introduces errors and distortions to the data for the following reasons:

(a) The process of making flat test specimens for the continuous carbon fiber filament winding system involves using a machine to wrap tows around a circular column or mandrel, then cutting and removing these circular plies and laying them up on a flat surface to form a flat specimen before curing. We have two concerns about this method: first, this specimen preparation procedure is not the actual process that is used in making the column casing; second, a flat specimen made by this procedure will result in wrinkles, distortions, and uneven tensions in the fibers of the flat test coupon, leading to a reduction in the strength and stiffness of the flat laminate.

(b) For the case of bonded shells, the bond thickness is uniformly controlled in the flat test specimens, but is quite variable in the large, circular shell assembly bonded in the field. Since the structural strength of adhesive bonds depends on the uniformity of adhesive thickness and mechanical properties, as well as on proper surface preparation of the adherents, a flat specimen introduces errors in the measured bond strength of the bonded shell system.

(c) A flat coupon is tested under uniform tension, whereas a ring test stresses the outside surface more than the inside, a situation closer to the actual loading in a circular casing.

For these reasons, we recommend that all materials properties for pre-qualification of any composite column casing system, for design purposes or strength retention assessment, should be obtained from a ring test. We recommend 508 mm (20 in) diameter ring specimens loaded by internal pressure (Figs. 1 and 2).

Thickness Measurement: Casing thickness is used as a measure of the amount of fibers used in the casing construction. This assumes certain wrapping procedures and material parameters. These parameters are used in the following formula to obtain the structural thickness t:

$$t = \frac{A_t}{V_f} * \frac{N}{P} * C$$

where,

A_t = cross sectional area of a tow or strand,
V_f = fiber volume fraction,
N = number of tows per pitch,
P = pitch, and
C = number of plies.

Direct measurements of the very thin casing thickness can produce large relative errors. For example, a small measurement error of 0.76 mm (0.030 in) in a 1.78 mm (0.070 in) thick casing represents a relative error of 43 %. Errors of this magnitude are common, and caused by minute surface irregularities and waviness, microscopic voids, surface resin migration, filament cross-over and twist, weave pattern, concrete adhering to sample surfaces, etc. Cored casing samples used for thickness measurements with a micrometer, as required by some specifications, incorporate all of the errors mentioned above and provide only an upper bound of the thickness. This is illustrated in Figure 3. On the other hand, the structural property that matters is the thickness specified in the above formula and controlled by five parameters. We recommend that

casing thickness be deduced from the above equation and knowledge of the five parameters involved.

Glass Transition Temperature: This issue concerns both the adhesives used to bond shells and the resin matrix of the shells. Some ambient cured adhesive systems have glass transition temperatures (T_g) much lower than would be expected to provide adequate jacket strength over the expected operational temperature range. It is well known that the mechanical properties of thermoplastic and thermoset materials change dramatically above their T_g . Usually, the change is a significant reduction in stiffness and strength. Because of this, the composites industry requires that the T_g of a thermoplastic or thermoset material (in this case, the adhesive) should be at least 15 °C to 30 °C (27 °F to 54 °F) higher than its maximum expected operating temperature. (Note that in aerospace, the requirement is usually 40 °C (72 °F) above the operating temperature.) This rule of thumb can only be ignored if specific data have been generated to show that it does not apply in a particular situation. Given that some specifications state that the maximum required operating temperature for composite jackets is 60 °C (140 °F), the T_g of **all** the materials used in a composite column casing should be at least 75 °C (167 °F). As shown in the table below, most of the systems proposed do not meet this requirement, a very risky situation indeed.

	System 1	System 2	System 3	System 4
T_g composite, min.	63 °C (145 °F)	104 °C (220 °F)	104 °C (220 °F)	104 °C (220 °F)
T_g adhesive, min.	not used	not used	65 °C (150 °F)	20 °C (68 °F)

Performance of a composite casing depends on the entire system. Thus, when a composite column casing system incorporates adhesive bonded joints, the adhesives should meet the performance requirements of the operating environment as well. For a successful application, maximum and minimum service temperatures must be considered in the selection of an adhesive. As stated above, the performance of adhesives is temperature dependent and their operating range is limited. On hot days, the operating temperature for columns can be expected to be greater than 20 °C (68 °F).

An example of the dramatic effect of T_g on performance is given by the strength of aluminum lap joints made with a common epoxide-polyamide adhesive (FM-100). Strength dropped by 50 % to 75 % between 0 °C (32 °F), which is below the T_g of the adhesive, and 65 °C (150 °F), which is above the T_g. This level of strength loss is not uncommon for adhesively bonded joints.

We recommend that casing materials be verified to perform at the maximum expected exposure temperature by testing them to at least this maximum temperature. It is critical that this be done in pressurized ring specimens made from the "as-built" jacket system (no post-cure of the adhesive). Given the high probability of reduced adhesive strength at elevated temperatures, we recommend that existing specifications be modified.

Positive results from the above recommended testing at the maximum expected operating temperature might still not be adequate. Environmental exposure, particularly exposure to

moisture, can further depress the actual T_g of the material and its adhesion in the field. In addition, it is well known that moisture up-take by a thermoplastic or thermoset material can be greatly accelerated if exposure occurs above the T_g of the material. This should be especially acute when composites are used in underwater casing applications. Users have already carried out some durability tests to address this issue.

Sampling of Field Specimens and Acceptance of Test Data: Current specifications do not specify a data evaluation method for either laboratory qualification or field quality verification. We recommend that the procedures of ASTM E 178 be adopted for this purpose. In particular, the values of concern in all acceptance test data should be the mean and standard deviation of several test points. It should be recognized that outliers are common in testing of any materials. Test data having standard deviations exceeding a certain ratio of the mean should be retested using double the original number of specimens.

DURABILITY TESTING:

Environmental Conditioning: Some of the environmental exposure conditions specified in current durability test programs are not representative of the operating environment in the field, and therefore give misleading results. They are:

(a) High temperature resistance: Currently the specimens are subjected to a continuous temperature of 60 °C (140 °F) for 1 000 h, 3 000 h and 10 000 h before testing. The specimens are returned to room temperature and tested. The high temperature exposure of 60 °C (140 °F) for the selected durations will undoubtedly post-cure some the composite systems, particularly ambient cured systems, thereby artificially increasing the test specimen strength and stiffness. In actual column casing applications, high temperature exposures last a short time (a couple of hours in the middle of the day) and the casing is most vulnerable to failure then.

To adequately assess temperature resistance, we therefore recommend that he specimens be tested in extreme conditions, i.e., the exposure duration should be very short to minimize any post curing, and the test should be conducted at 60 °C (140 °F) or some appropriate maximum temperature of service.

(b) Freeze-Thaw Resistance: Current specifications require that specimens be subjected to 24 freeze-thaw cycles, then returned to room temperature and tested. The number of cycles should be higher and the temperature should be related to the low temperatures in the field. Composite laminates have higher strengths and stiffness at colder temperatures. However, in most bonded shell systems, the strength of adhesive bonded joints can be significantly reduced at low temperatures. Most adhesives become stiffer and more brittle as temperatures decrease. This condition is detrimental to adhesive bonds, and makes them very susceptible to shear failure. For bonded systems, it is critical that testing be conducted at the cold temperatures expected in use, e.g., -25 °C (-13 °F) and not at room temperature of 24 °C ± 2 °C (75 °F ± 3 °F) as required in current specifications. We recommend that specimens be tested at cold temperatures and that the number of freeze-thaw cycles be increased to at least 100 cycles.

Durability Assessment of Adhesive Bonds/Joints: Current pre-qualification tests do not cover adequately adhesive bonds / joints. Currently, bond durability specimens are constructed with the adhesives being sandwiched between two composite laminates having edges sealed with a waterproof sealant prior to exposure, hence they are completely protected from the environment rather than being exposed to it as in the field. These bond durability test specimens remain uncut during simulated environmental exposure, and are then cut (with lateral staggered grooves that form the shear area) just prior to testing. In so doing, the environmental exposure medium does not reach the bond area as it would in field installed casings. We have two concerns: first, bonds/joints are critical parts, being zones of high normal (peel) and shear stresses, and the likely points of failure initiation; second, the lateral staggered grooves forming the shear area in the flat test specimen should be cut before environmental exposure to allow for proper simulation of exposure.

Material Safety Factor: Another concern centers on the durability of some composites in high moisture environments and the absence of material safety factors in the design of the composite casings. Nearly all polymers and adhesives and some glass fibers are adversely affected by moisture, which can reduce service life dramatically in some cases. Some columns sit in water for several months of the year. This environment may not be at all suitable for some composite casing systems and their adhesive bonded joints. While certain durability programs have produced data after 10 000 hours of exposure to some of these environments, these data have not yet been used to develop material safety factors in the design of current column casings. "Degradation of composites typically used in civil infrastructure, when it occurs, usually affects strength, rather than stiffness, and hence care should be taken to apply strength reduction coefficients to designs to account for drop-offs in short-term and long-term performance levels" (Seible and Karbhari 1997).

COLUMN CASING SPECIFICATION:

Concrete Surface and Casing Surface Resin Coating: The Illinois Department of Transportation has data showing the deleterious effects of entrapped moisture on the concrete of a column. A resin coating on the concrete surface inhibits "breathing", i.e., the transport of moisture into and out of the column. This coating is not necessary if the column is wrapped, since wrapped casings provide adequate permeability, while a homogeneous coating is significantly less permeable and adds considerable cost.

The application of a resin coating on the outside surface of a casing is redundant. Where required, coatings should be properly selected to provide adequate permeability as well as protection against ultraviolet radiation and other surface effects. In general, resin coating of an FRP casing is an unnecessary additional expense.

Field Quality Assurance: Certain materials tests, process control tests and finished column casing tests should be performed to validate manufacturing process control and to verify the quality and long term reliability of the casing installation. In this regard, current specifications are either inadequate or unnecessary for the following reasons:

(a) Currently, material testing for all composite casing systems is done on a daily basis on field coupons. For hand-wrapped casing systems where the mixing of resin and hardener, as well as the impregnation process, occur in the field, this is necessary to verify manufacturing process control. However, for casing utilizing prepreg materials, **daily** field coupons are an excessive demand, since the material properties are certified by the supplier. In this case, verification of the manufacturing process control should be done primarily to ensure the degree of cure. The excessive testing on prepreg systems imposes cost penalties and creates an uneven playing field for the competitive systems. Current column casing specifications should differentiate between manufacturing processes and specify a frequency of materials conformance testing tailored to each type of material, field manufacturing process and supplier batch sizes. In most cases certification of material properties by the suppliers should suffice. If field testing of materials is mandatory, then one test series for each supplier batch is more than adequate and would apply to all materials entering the construction site including coatings, resin and adhesive components, dry fibers and fabric, pre-impregnated fibers and fabric, paint, etc.

(b) Manufacturing process controls need to be checked for every mix (for multiple component field mixtures); and every column for column specific operations such as surface preparation, filling, profiling, thickness control and cure. Present specifications are inadequate.

(c) There is a critical need for visual inspection criteria of finished casing for abnormalities, and standards for acceptable corrections. Such things as delaminations, debonding, and surface irregularities (crazings, cracks, loose fibers, dry areas, resin rich areas) need to be addressed. Again, present specifications are inadequate. The paper by Hawkins, Johnson and Nokes in this volume presents a promising method.

The extent and frequency of testing, checking and visual examination need to be specified in advance and incorporated in bid specifications to avoid misunderstanding and excessive cost and to maintain expected quality levels.

RECOMMENDATIONS AND CONCLUSIONS:

For the continual improvement of bridge retrofit specifications, we recommend the institution of a suppliers' alliance which would participate in the improvement of specifications for materials, job qualification and construction. This alliance would work closely with standards writing organizations, such as AASHTO, in the continual development of highway bridge standards. For the development of standards for the structural retrofit of **buildings** using FRP, we recommend using research results, experiences and standards for **bridges** as a starting point.

For both bridge and building retrofit with FRP, we recommend that the National Institute of Standards and Technology (NIST) play a strategic role in leading the technological progress for standards improvements. NIST contribution will provide leadership to both the research needed in formulating new approaches to retrofit design and construction and the development of standards needed to implement this new field of technology. Standards development would encompass both the evaluation of existing specifications and the development of new, national

standards for all retrofit applications. In conclusion, we advocate standards development by a partnership among government, industry, and academia.

Reference

(1) Seible, F., Karbhari, V., (1997), "Seismic Retrofit of Bridge Columns Using Advanced Composite Materials", National Seminar on Advanced Composite Material Bridges (FHWA), Arlington, Virginia, May 5-7, 1997.

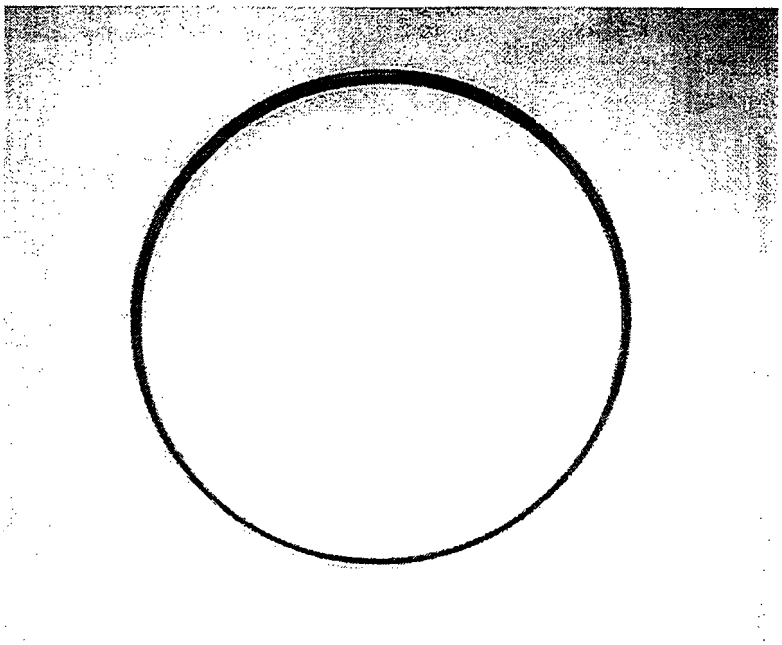

Figure 1A: Untested Naval Ordnance Laboratory (NOL) ring made with automated carbon jacketing process.

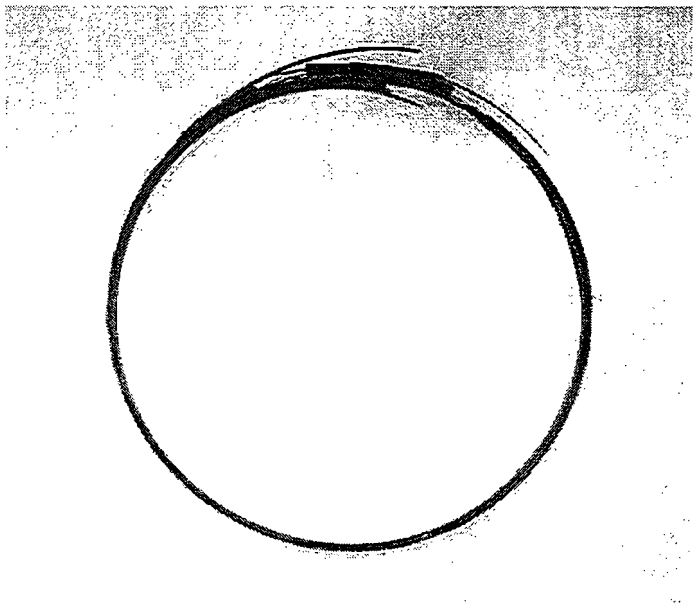

Figure 1B: Naval Ordnance Laboratory (NOL) ring after internal pressurization testing.

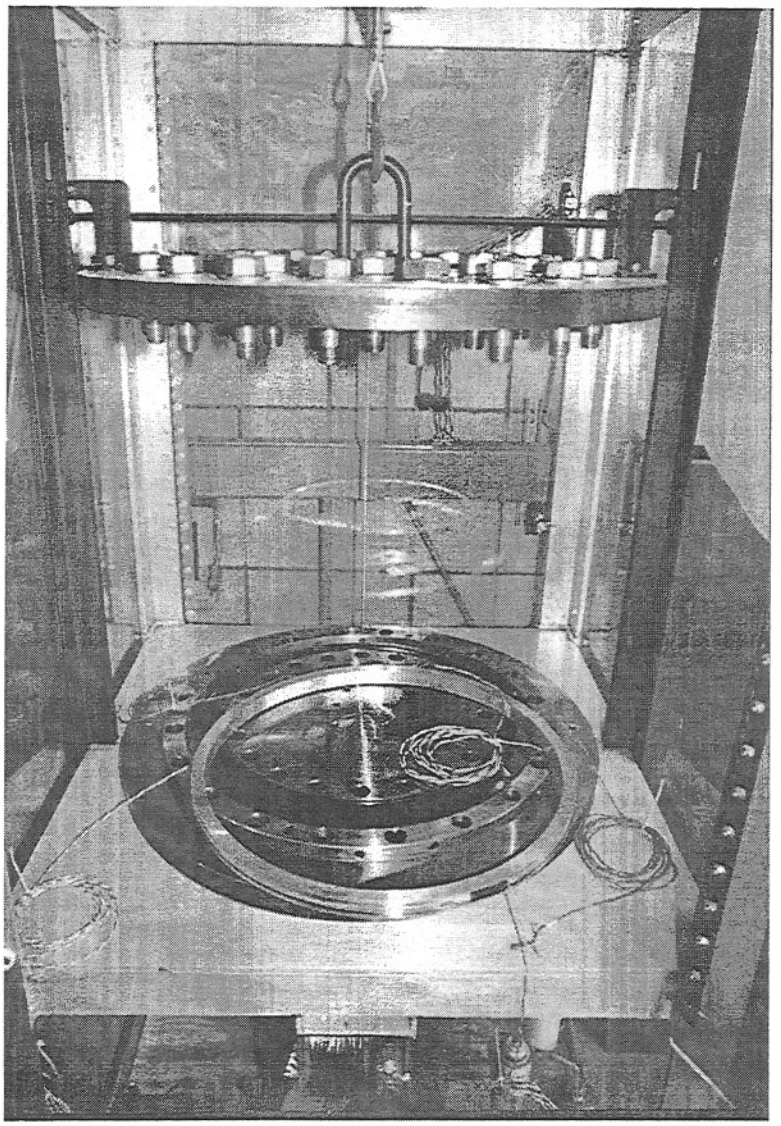

Figure 2: Test fixture for NOL ring internal pressurization testing.

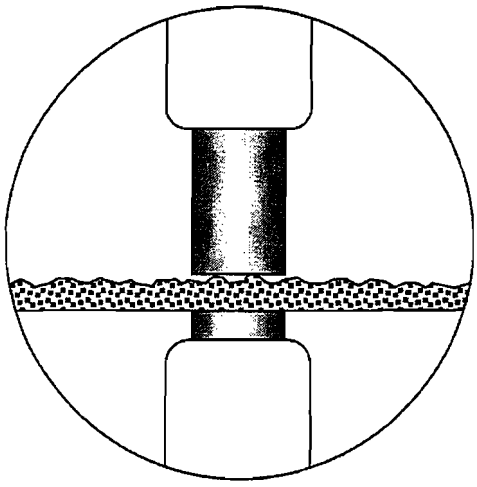

Figure 3: Illustration of Thickness Measurement Error with Cored Casing Sample.

ENVIRONMENTAL DURABILITY OF COMPOSITES FOR SEISMIC RETROFIT OF BRIDGE COLUMNS

Gary L. Steckel, Gary F. Hawkins, and Jerome L. Bauer, Jr.
Center for Advanced Structural Applications
The Aerospace Corporation
El Segundo, California 90245

Several composite overwrap systems have been proposed to the California Department of Transportation as alternative column casings for seismic retrofit. Environmental durability of the proposed composite casing materials is being determined as part of a qualification program. Environmental exposures include 100 % humidity, salt water, an alkali solution, diesel fuel, ultraviolet light, elevated temperature (60 °C or 140 °F), and a cyclic freeze/thaw test. Most carbon-fiber-reinforced-epoxy systems are showing excellent durability after 10 000 h exposures. However, one carbon/epoxy system had up to a 50 % reduction in short beam shear strength and a significant reduction in glass transition temperature associated with moisture absorption. The reduced glass transition temperature caused an unacceptable reduction in tensile strength at 50 °C (122 °F). E-glass-reinforced-polymer systems were susceptible to strength reductions after exposure to moist environments. For most systems and environments, this reduction was less than 20 % after 10 000 h exposures. However, one E-glass system had a 35 % reduction in tensile strength after 10 000 h in 100 % humidity at 38 °C (100 °F). None of the carbon/epoxy or E-glass/polymer systems had a significant reduction in Young's modulus from the environmental exposures.

KEY WORDS: Carbon, Composites, Durability, Environment, Fiberglass, Freezing, Moisture, Retrofit, Seismic, Thawing, Ultraviolet.

INTRODUCTION

In December 1995, the California Department of Transportation (Caltrans) formally initiated a program for the evaluation and qualification of advanced composite materials for seismic retrofit and rehabilitation of structures [1-3]. This program has been described with updates on its progress by Sultan et al. (1995, 1997, 1997). The Caltrans program is a model public-private partnership with funding from the California Department of Transportation (Caltrans), the Federal Highway Administration (FHWA), and private industry. A significant portion of the program is administered by the Society for the Advancement of Materials and Process Engineering (SAMPE) in order to facilitate the cooperative process with industry. The Aerospace Corporation is supporting Caltrans in the qualification program and was selected as an independent material testing facility. Structural testing is principally conducted at the University of California at Irvine (UCI).

The principal initial application of composites by Caltrans is a casing or overwrap on bridge columns for enhancing seismic resistance. Several composite manufacturers have developed composite casing systems that have potential for being cost effective relative to current steel casing designs. In April 1996, Caltrans issued pre-qualification requirements for alternative column casings for seismic retrofit and later amended these requirements in January 1997 [Chapman et al. (1997)]. These requirements include durability testing to demonstrate the ability of the proposed composite material systems to withstand a variety of climatic and unnatural exposure conditions. Environmental exposures include 100 % humidity

at 38 °C (100 °F), immersion in salt water, immersion in an alkali solution, ultraviolet light, dry heat at 60 °C (140 °F), a freeze/thaw test, and immersion in diesel fuel. The effects of the environmental exposures are being quantified by measurements of the composite panel mass, tensile modulus, strength, failure strain, interlaminar shear strength, and glass transition temperature. Property measurements are being made after exposure intervals of 1 000 h, 3 000 h, and 10 000 h to allow estimates of degradation over the projected service life

In this paper, the candidate composite overwrap systems are described and the preliminary results of the environmental durability testing are presented. The objective of the durability program is to determine whether the initial, baseline properties are maintained after the environmental exposures. Complete descriptions of the environmental exposure conditions and property test methods are given.

EXPERIMENTAL PROCEDURES

Composite Overwrap Systems

Through January 1998, 13 composite overwrap systems were undergoing environmental durability qualification testing for seismic retrofit of bridge columns. The overwrap system manufacturers are identified in Table 1 along with generic descriptions of the composite types. The list of systems includes nine carbon/epoxy systems, two E-glass/epoxy systems, one E-glass/vinyl ester system, and one E-glass/polyester composite.

Table 1--Composite systems undergoing environmental durability qualification testing

SUPPLIER	COMPOSITE SYSTEMS
Fyfe Company	2 E-Glass/Epoxy & 1 Carbon/Epoxy
XXsys Technologies, Inc	3 Carbon/Epoxy Systems
Hardcore DuPont Composites L.L.C.	E-Glass/Vinyl Ester
CMI, Incorporated	E-Glass/Polyester
TONEN Corporation	2 Carbon/Epoxy Systems
Mitsubishi Chemical Corp.	Carbon/Epoxy
Mitsubishi Chemical Obayashi Corp.	Carbon/Epoxy
Mitsubishi Chemical Toray Industries, Inc.	Carbon/Epoxy

The Hardcore DuPont and CMI systems are prefabricated shells that are manufactured in a factory and bonded to the column. The XXsys and Mitsubishi/Obayashi systems are applied to the column using filament winding techniques. XXsys uses preimpregnated fiber tows and an elevated-temperature-curing resin system while Mitsubishi/Obayashi uses wet winding and an ambient-temperature-curing resin system. The Fyfe Co., Tonen, Mitsubishi, and Mitsubishi/Toray overwraps are all hand lay-up systems utilizing ambient-temperature-curing epoxy matrices. Fyfe Co. employs a portable saturation machine to preimpregnate the resin into the glass or carbon fabric immediately before applying the fabric to the column. The other hand lay-up systems all involve separate application of the resin and fiber onto the column and subsequent impregnation using special rollers or squeegees.

All 13 overwrap systems are essentially passive systems in which the overwrap is not under any significant stress until an earthquake occurs. Their effectiveness in enhancing seismic resistance of bridge columns depends upon confinement of the column concrete. Thus, high strength and stiffness are required in the hoop direction of the column overwrap and maximum fiber loading is in this direction. High strength and stiffness must be maintained in the hoop direction throughout the design life of the overwrap. Thus, the environmental durability qualification test program places a strong emphasis on determining any environmental effects on Young's modulus, tensile strength, and failure strain in the hoop direction of the composite overwrap systems.

The seismic retrofit of bridge columns application is unique in that the composite fully encases the column so that a strong adhesive bond between the composite and the concrete is probably not required. Also, as noted above, the

composite is not under any significant stress under normal conditions. Thus, the effects of environmental exposures on fatigue and creep properties of the composites and composite-to-concrete bond strength are not addressed in this program. However, these are important issues for other composite retrofit applications, such as beam strengthening, and must be studied in other programs.

Environmental Exposures

The test matrix of environmental durability exposure conditions required by Caltrans is given in Table 2. Flat laminates of each candidate composite system are being subjected to these environmental exposures for the times or numbers of cycles indicated. Each panel is subjected to one exposure condition. Thus, the individual effects of each exposure condition are being evaluated. Synergism between the different exposures is not being evaluated except as indicated in the ultraviolet/condensation and freeze/thaw exposures. Natural or climatic exposures include: water resistance, salt water resistance, ultraviolet resistance, and a cyclic freeze/thaw test. Additional exposures include 4 h in diesel fuel to evaluate the effects of a fuel spill following a vehicular accident and an alkali solution

Table 2--Environmental durability test matrix

ENVIRONMENTAL DURABILITY TEST	TEST CONDITIONS	TEST DURATION h
Water Resistance	100 % Humidity At 38 °C	1 000, 3 000, & 10 000
Salt Water Resistance	Immersion At 23 °C	1 000, 3 000, & 10 000
Alkali Resistance	Immersion In $CaCO_3$ pH = 9.5 & 23 °C	1 000, 3 000, & 10 000
Dry Heat Resistance	Furnace At 60 °C	1 000 & 3 000
Fuel Resistance	Immersion At 23 °C	4
Ultraviolet Light Resistance	Cycle Between UV At 60 °C & Condensate At 40 °C	4 per Condition, 100 Cycles
Freeze/Thaw Resistance	Cycle Between 100 % Humidity At 38 °C & Freezer At –18 °C	24 per Cycle, 20 Cycles

exposure to evaluate long-term compatibility between the concrete column and composite overwrap.

For water resistance, 100 % humidity at 38 °C (100 °F) was selected as an accelerated test. This exposure is considered more severe than an immersion test at ambient temperature because the elevated temperature increases water absorption and chemical reaction rates and the high humidity exposure allows for atmospheric reactions that would not occur in an immersion test. The humidity exposure was performed following the procedures of ASTM D 2247 (1995). The composite panels were mounted on racks in the humidity chamber and held in a vertical position. The humidity chamber was set up to provide condensation on the panel surfaces.

An immersion test was selected for salt water resistance to test the effects of prolonged immersion in ocean water. Substitute ocean water prepared following ASTM D 1141 (1995) was used for the salt water resistance exposure. The composite panels were immersed in 10 L of substitute ocean water which was maintained in a 36 L, closed polypropylene container having the approximate inside dimensions of 50 cm x 35 cm x 15 cm. All test panels for a given composite system were exposed in a single container, but separate containers were used for different systems. The test panels rested on the bottom of the containers in a horizontal position with adequate gaps between panels to maintain chemical equilibrium throughout the liquid bath.

The 60 °C (140 °F) exposure was selected as the maximum exposure temperature anticipated in service. At the elevated temperature, it was anticipated that any degradation would occur rapidly. Therefore, the maximum exposure time was limited to 3 000 h. The exposure was carried out following ASTM D 3045 (1995) with the panels resting on horizontal racks in a forced-draft circulating air furnace. All composite systems were exposed in the same furnace with a separate rack for each system.

A standard ultraviolet (UV) resistance test [ASTM G 53 (1995)] is being used to determine

the effects of alternating ultraviolet light and condensating humidity exposures. One side of the composite panels is exposed to cyclic exposures of fluorescent ultraviolet light at 60 °C (140 °F) for 4 h followed by water condensation at 40 °C (104 °F) for 4 h. Total exposure will be for 100 cycles. The ultraviolet resistance test was initiated during January 1998 and was not completed until after preparation of this paper. Therefore, no UV results are included.

The freeze/thaw test was developed to determine the effects on the composite systems of freezing following significant water absorption. The panels were maintained in the humidity chamber at 100 % humidity and 38 °C (100 °F) for a minimum of two weeks prior to the initial exposure to the freezer at –18 °C (0 °F). Typically, the panels were placed in the freezer at the beginning of the work day and returned to the humidity chamber at the end of the day. Thus, each 24 h cycle included approximately 9 h in the freezer and 15 h in the humidity chamber. It was anticipated that any effects of the freeze-thaw exposure would become apparent after a few cycles and the test was performed for only 20 cycles. However, it was recognized that the effects could become more pronounced with additional cycling. Therefore, allowance was made to perform additional freeze/thaw cycles on any composite systems showing susceptibility to this exposure.

The alkali resistance test was performed to determine any effects on composite overwraps from the high alkalinity of concrete columns. This is an important test because it is well known, as demonstrated by Litherland et. al. (1991) and Yilmaz (1991), that unprotected glass fibers are severely degraded in alkaline solutions. Seymour (1988) has reported that many organic resins are also susceptible to chemical attack in strong alkali solutions. A saturated solution of calcium carbonate, $CaCO_3$, in water having a pH of 9.5 was selected for this exposure. Tremper (1966) reported that fresh concrete, or the interior of aged concrete, has a much higher alkalinity (pH $\geq$ 14). However, for the seismic retrofit of bridge columns application, all columns requiring retrofit are at least 20 years old. Concrete reacts with the atmosphere to form $CaCO_3$ and it was anticipated that this would be the appropriate alkaline solution exposure for this program. Field tests were performed on aged columns under Interstate 10 in Los Angeles and indicated that even after light surface grinding, representative of typical column wrapping surface preparation, concrete pH did not exceed 9.0 [Steckel (1998)]. Therefore, a saturated solution of $CaCO_3$ having a pH of 9.5 was verified to be an appropriate alkalinity exposure for the seismic retrofit of bridge columns application. The alkaline and diesel fuel exposures were performed in the same type of container and followed the same immersion procedures as described above for the salt water resistance exposure.

The exposure panels were approximately 30 cm x 30 cm (12 in x 12 in) and had thicknesses which were not allowed to exceed the minimum thickness of a column overwrap. For most systems, the panels had thicknesses much less than a column overwrap, thus adding to the conservative approach of the qualification program. Exposure panels were required to have the same lay-up and, to the greatest possible extent, follow the same processing procedures as a column overwrap. For example, exposure panels for filament wound systems had to be wound using the same filament winding equipment used for column wrapping. Composite column overwraps have minimal exposure of edges to the environment. Therefore, edge protection was allowed along all four edges of the exposure panels. The edge sealant, typically epoxy, was selected by each manufacturer and approved by The Aerospace Corporation and Caltrans. Although most systems are painted following application to bridge columns, no painting of environmental durability panels was allowed. A single panel was exposed to each environmental condition for each required duration. Thus, for each system, a total of 14 panels were required for the environmental durability test matrix. An

additional four panels were required for establishing baseline material properties.

Material Property Measurements

The effects of the environmental exposures were determined from measurements of tensile properties (Young's modulus, ultimate tensile strength, and strain to failure), short beam shear strength, and Shore D hardness of the composite and glass transition temperature of the resin matrix. Measurements on exposed panels were compared to baseline values determined for four unexposed panels for each composite system. Multiple panels were used for characterizing baseline properties in order to quantify panel-to-panel variations. Otherwise, misinterpretation of the effects of the environmental exposures on material properties could result. It is important to note that the environmental durability of each system is being evaluated based upon a comparison with the baseline properties for that system. No comparisons of absolute values of material properties for different systems are being made since each system has a unique overwrap design and, therefore, unique material requirements.

Mass measurements were made on each panel before and after the environmental exposures and periodically throughout the 10 000 h exposures. The primary purpose of these measurements was to monitor moisture absorption during the humidity, salt water, alkali solution, freeze/thaw, and ultraviolet/condensation exposures and moisture dry-out from the oven exposure. These measurements are very important for determining the time to reach equilibrium in each environment, for establishing any relationship between moisture content and property changes, and for predicting long-term effects.

For those systems in which prefabricated composite shells are installed onto the columns with adhesive bonding between the composite and column and/or between successive layers of the prefabricated composite, environmental durability testing is also required for the adhesive. Separate test panels were required for each exposure condition given in Table 2 for adhesive durability testing. Lap shear strength measurements were made on samples having composite-to-composite bonds to determine adhesive degradation. At the present time, the Hardcore DuPont and CMI overwraps are the only systems requiring adhesive qualification. Adhesive qualification results are not included in this paper.

A schematic drawing of an exposure panel in Figure 1 shows the typical sectioning of the panels following exposure for property measurements. This drawing was followed for sectioning panels unless visible defects, unrelated to the environmental exposure, which could affect property measurements were observed. Whenever possible, the sectioning plan was changed to avoid such defects. Although the edges of the panels were sealed, a 25 mm border around the outside of each exposure panel was discarded. A 25.4 cm x 15.2 cm area was cut out for the preparation of 5 tensile samples. Strips 6.5 mm and 13 mm wide were cut out for 6 short beam shear samples and 1 glass transition temperature sample, respectively. All tensile, short beam shear, and glass transition temperature samples were cut out with the sample length parallel to the primary fiber-reinforced direction of the composite panels. All panel sectioning was performed using a water-cooled diamond cut-off wheel.

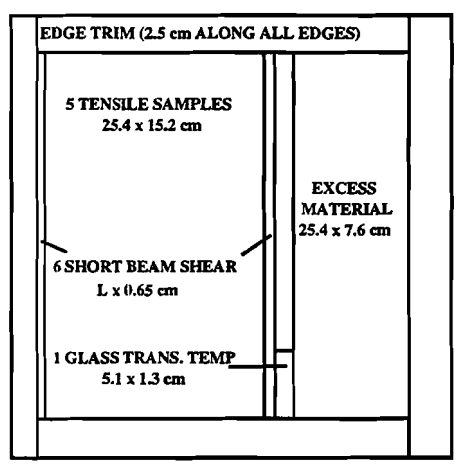

Fig. 1-- Lay-out for cutting samples from a 30 cm x 30 cm composite durability panel

All property tests were performed within 7 d after the panels were removed from the exposure environments. Maintaining this schedule was particularly important for panels exposed to the various moisture absorption environments in order to minimize moisture dry-out prior to testing. In order to minimize moisture dry-out rates or other atmosphere/panel interactions, all panels were maintained in sealed plastic bags following exposure.

Uniaxial tensile tests were performed using straight-sided, tabbed samples following sample preparation and test procedures specified in ASTM D 3039 (1995). G10 fiberglass/epoxy grip tabs 1.6 mm-thick and 51 mm-long with a 7° taper were bonded across both ends on each side of the panel section for tensile samples shown in Figure 1. The grip tabs were bonded using Hysol EA 9394 adhesive which was cured at ambient temperature. The adhesive was allowed to cure for a minimum of 2 d before five 1.9 cm-wide tensile samples were cut from the tabbed panel section using a water-cooled diamond cut-off wheel. The grip tabs were allowed to cure a minimum of 5 d prior to tensile testing. Tensile testing was performed using an Instron Universal Testing Machine having wedge grips. Strain was measured throughout the test using a 5.1 cm-gage length, clip-on extensometer. Samples were loaded to failure at a constant crosshead rate of 5.1 mm/min, giving an approximate strain rate of 0.0006 /sec. Load and strain were recorded with a strip chart recorder and a computer data acquisition system. Young's modulus was calculated by a least squares analysis of the stress-strain curve over the strain range from 0 to 0.0050.

Hardness measurements were made on each composite panel using a Shore D durometer. A total of 6 measurements were made on each panel, 3 on each side. The hardness measurements were made on the grip region of the tensile samples prior to the application of grip tabs.

Apparent interlaminar shear strength measurements were made by the short beam shear method following ASTM D 2344 (1995). ASTM D 2344 recommends support span/composite thickness ratios of 5 for glass fiber-reinforced composites and 4 for carbon fiber-reinforced composites. Recommended diameters for support pins and the nose pin are 3.2 mm and 6.4 mm, respectively. The minimum span length was defined as the length for which the nose pin fits between the support pins, 9.6 mm for the recommended pin diameters. Therefore, the minimum sample thicknesses were approximately 2.4 mm for carbon fiber systems and 1.9 mm for glass fiber systems. For the glass fiber systems, the panel thicknesses selected for the test program exceeded the minimum thickness requirement for short beam shear strength (SBSS) testing. But for the carbon fiber systems, the selected panel thicknesses were typically around 1.3 mm, much too thin for SBSS testing. Therefore, separate panels having a minimum thickness of 2 mm, but typically greater than 2.5 mm were fabricated for the SBSS tests. These thicker panels were used only for short beam shear testing and relatively small panels (typically 9 cm x 9 cm) were exposed along with the larger panels. Sample thicknesses for the SBSS testing varied for the different composite systems from approximately 2 mm to 5 mm and the support span was varied to maintain the recommended span/thickness ratio. Sample lengths were also varied to maintain the recommended length/thickness ratios of 7 for glass fiber systems and 6 for carbon fiber systems. For any given composite overwrap system, constant sample and span lengths were maintained for all exposures.

The glass transition temperature of the composite matrix was determined using a Rheometrics Dynamic Mechanical Analyzer (DMA). The Rheometrics DMA subjects a 5.1 cm x 1.3 cm sample to cyclic torsional deformations and quantifies the material response by measuring the shear modulus, G', the shear loss modulus, G'', and the lag angle between the applied stress and resulting strain, tan δ, as functions of temperature. Plots of any of these three parameters versus temperature can be used to determine the glass transition temperature, T_g. In this program, the G'' curve was used because it

usually gives a sharp peak at the transition, making it easier to determine T_g than for the tan δ or G' curves.

The mechanical and physical property measurements discussed in this section are the only measurements specifically required for assessing durability in the Caltrans prequalification requirements document [Chapman (1997)]. However, the document states that additional tests may be imposed to ensure the durability of any proposed composite casing system. For example, as will be discussed below, one system was susceptible to significant reductions in glass transition temperature due to moisture absorption. The T_g was reduced to the point that there were concerns that the tensile strength could be significantly reduced at the higher service temperatures. Therefore, additional tensile testing was performed at 50 °C (122 °F) which verified a potential strength problem at elevated temperatures.

One of the prefabricated systems having bonded shells uses an adhesive which also has a low glass transition temperature. For this system, additional lap shear strength tests were performed at temperatures up to 50 °C (122 °F). In addition, split-D tests were performed on 50 cm-diameter rings at temperatures up to 60 °C (140 °F) to ensure that this system maintained the required strength and stiffness at maximum service temperatures.

Thus, although limited testing is required, the test matrix was designed to provide both engineering data and fundamental material response data so that potential problems could be identified. When potential problems are revealed, additional tests are instituted to ensure that the composite casing system under evaluation meets Caltrans requirements.

RESULTS AND DISCUSSION

Through January 1998, material property testing following all exposures except the cyclic UV/condensation exposure was completed for three glass fiber/polymer resin systems and four carbon fiber/epoxy resin systems. Testing for two additional carbon fiber/epoxy systems was completed following the 3 000 h exposures. The 10 000 h exposures and property testing for these two systems was scheduled for completion during March 1998. Two other carbon fiber systems and one glass fiber system had been tested following the 1 000 h exposures and were on schedule for completion of the 3 000 h exposures in March 1998 and the 10 000 h exposure in January 1999. The other carbon/epoxy system was still in the panel fabrication stage.

In this paper, highlights are being presented of the experimental results for the seven systems for which the test matrix has been completed. In presenting the data, the manufacturers are not identified. The carbon fiber systems are identified as C1, C2, C3, and C4 and the glass fiber systems are identified as G1, G2, and G3. In addition, the absolute values of mechanical properties are not reported. All mechanical property data for each exposure condition for any given material system are normalized by dividing by the average property value for the control samples for that system. Therefore, the exposure results are shown as fractions of the average control values, so any degradation due to the exposures is easily identified. For tensile properties, the exposure data were determined from the average of 5 samples and the control data were for the average of 20 samples. For the SBSS, the exposure data were for the average of 6 samples and the control data were for the average of 24 samples. Graphs showing plots of normalized, averaged properties as functions of exposure time will be presented. These graphs will also show the coefficient of variation (CV) for the control samples. This information is useful for judging the significance of any property changes resulting from the various exposures relative to scatter bands for control data.

Before presenting the results for the individual E-glass/polymer and carbon/epoxy systems, certain general observations that applied to all systems will be discussed. One of the most important findings was that no significant reduction in Young's modulus was measured for

any system following any of the environmental exposures. No reductions in Young's modulus exceeding 5 % were measured. This is an important result since the design of composite casings for seismic retrofit is stiffness critical.

Another important implication of the fact that Young's modulus was not affected by the various exposures is that any changes in failure strain arising from an exposure condition were essentially equal to changes in tensile strength. This is due to the fact that all of the systems under evaluation are either unidirectionally reinforced or are reinforced with highly unbalanced, essentially unidirectional woven fabrics. As a result, the stress-strain curves for all seven systems were nearly linear to fracture. Thus, it follows that if the modulus did not change, any changes in strength and failure strain were approximately equivalent. In the discussion that follows, reductions in tensile strength due to some of the environmental exposures will be presented. The reader should be aware that although data for failure strain will not be presented, any reduction in normalized tensile strength was accompanied by a similar reduction in normalized failure strain.

A second general observation was that the exposure to 60 °C (140 °F) had no degrading effects on the mechanical and physical properties for any system. Room temperature tensile properties were unaffected by this exposure. All systems experienced a small decrease in mass (0.1 % to 1.0 %) due to moisture dry-out at the elevated temperature. Furthermore, the ambient-temperature-cured systems generally had an increase in glass transition temperature. T_g ranged from 60 °C to 68 °C (140 °F to 154 °F) for the control panels for the different ambient-temperature-cured systems and ranged from 66 °C to 95 °C (151 °F to 203 °F) for these systems after the 3 000 h exposure to 60 °C (140 °F). Thus, the only effects of the elevated temperature exposure were to drive off absorbed moisture for all composites and to advance the cure of the ambient-temperature-cured systems. As a result of these two effects, all systems had a small increase in short beam shear strength following the 60 °C (140 °F) exposure. After 3 000 h, the increase in SBSS was between 5 % and 10 % for the elevated-temperature-cured systems and between 10 % and 15 % for the ambient-temperature-cured systems.

It was anticipated that the only potential effects of the 4 h exposure in diesel fuel might be some surface reaction or dissolution of the polymer matrix. These effects might be detected by a reduction in hardness, T_g , or SBSS. None of these properties were affected by the diesel fuel exposure. One E-glass/polymer system, G1, and one carbon/epoxy system, C2, did have small reductions in tensile strength and failure strain. The apparent reductions were around 10 % and were probably due to panel-to-panel variations for these two systems. Nevertheless, the 4 h diesel fuel exposure and subsequent property measurements will be repeated for systems G1 and C2 to resolve this issue. No other systems showed any effects from the diesel fuel exposure.

It will be shown in the discussion that follows that the polymer matrix for some systems was significantly softened due to moisture absorption. This plasticization of some polymer matrices was detected by reduced T_g's and lower SBSS. Despite this softening of the composite matrix for some systems, Shore D hardness measured with a durometer was not affected by any exposure for any system. Durometer hardness measurements for composites are dominated by the reinforcement unless the sample has a thick layer of resin on the surface. None of the systems studied had a thick resin layer on the panel surfaces. Therefore, since the hardness of carbon or E-glass fibers is probably not affected by the exposure conditions studied in this program, it is not surprising that no changes in Shore D hardness were measured.

E-Glass/Polymer Systems G1, G2, and G3

All three E-glass/polymer systems demonstrated some degree of susceptibility to tensile strength degradation from long-term moisture exposure. This degradation is demonstrated in Figure 2 which shows plots of normalized tensile strength

as a function of exposure time in 100 % humidity at 38 °C (100 °F) or in the pH 9.5 alkali solution. In these plots, exposure time is expressed in days. Thus, exposure times are 41.7 d, 125 d, and 417 d for the 1 000 h, 3 000 h, and 10 000 h exposures, respectively. Note that the plots for 100 % humidity include the freeze/thaw panels which were exposed to 36 d in the humidity chamber. The graphs in Figure 2 also show the coefficients of variation for the control samples. The coefficients of variation were around 12 % for systems G1 and G3, but only 6 % for system G2.

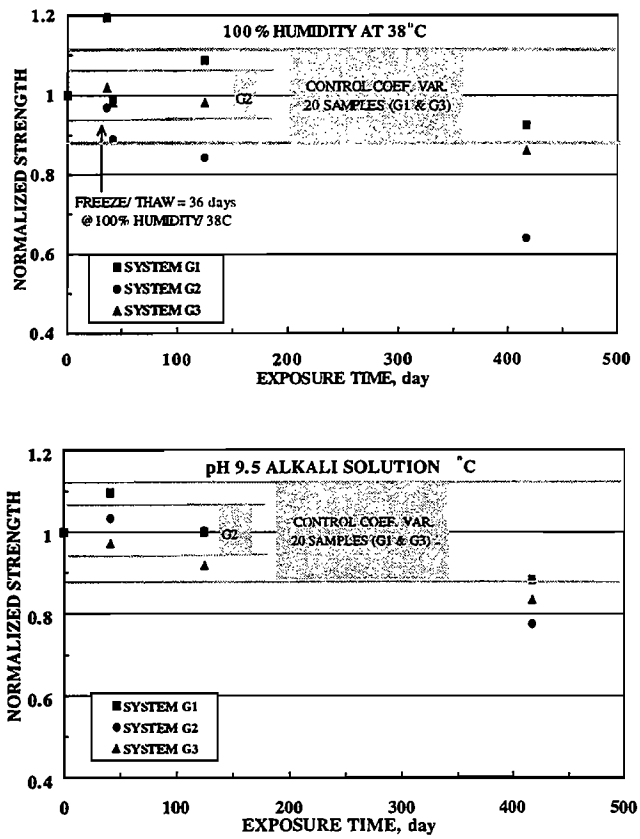

Fig. 2--Normalized tensile strength for systems G1, G2, and G3 as functions of exposure time in 100 % humidity at 38 °C (100 °F) or pH 9.5 alkali solution at 23 °C (73 °F).

The most severe degradation in tensile strength was experienced by system G2 when exposed to 100 % humidity at 38 °C (100 °F). The degradation in tensile strength progressively increased from approximately 10 % after 1 000 h (41.7 d) to 35 % after 10 000 h (417 d). The most alarming observation was that there was no indication that the rate of degradation was diminishing with exposure time. Thus, additional degradation would be expected for longer exposure times. The 100 % humidity at 38 °C (100 °F) environment is clearly an accelerated test for system G2 relative to an ambient temperature immersion test. This is demonstrated by the much lower degradation rate for system G2 from the alkali solution immersion. Similar results were obtained for the salt water exposure. There was no apparent degradation in tensile strength of system G2 after 1 000 h or 3 000 h (41.7 d or 125 d) exposures in the alkali or salt water solutions. But a degradation of approximately 20 % was measured after 10 000 h (417 d) immersions. Interpretation of the tensile strength results for systems G1 and G3 was complicated by the relatively high scatter for the control samples. The high scatter was due to large panel-to-panel variations. For example, the spread in average tensile strength between the strongest and weakest control panels was 38 % for system G3 and 29 % for system G1. On the other hand, the coefficient of variation for the five tensile tests for any given panel did not exceed 7.5 %. Panel-to-panel variations were particularly undesirable since separate panels were used for each exposure and for control testing. Figure 2 shows that after 1 000 h and 3 000 h (41.7 d and 125 d) exposures in the humidity chamber or alkali solution, the tensile strength for systems G1 and G3 was within the scatter band established by the control samples. Similar results were obtained for the salt water exposure. After 10 000 h (417 d) exposures, the normalized tensile strength for system G3 was below the control sample scatter band for all three moisture exposure conditions. The apparent degradation varied from 13 % for the 100 % humidity at 38 °C (100 °F) exposure to 20 % for the salt water exposure. Thus, it was concluded that the tensile strength of system G3 was affected by the 10 000 h (417 d) exposures to moist environments.

For System G3, 61 cm by 61 cm panels were fabricated and subsequently sawed into four 30 cm by 30 cm subpanels for durability testing. One of these large panels was used for the humidity exposures, a second was used for salt water, and a third was used for alkali. In each case, one subpanel was used as a control panel and the other three were used for the three different exposure times. It was assumed, and later verified by the experimental results, that panel-to-panel variations would be smaller for the four subpanels sawed from a single large panel than for subpanels from different large panels. Therefore, it is more appropriate to normalize the data for each of these exposures relative to the average tensile strength for the control panel sawed from the same large panel, rather than relative to the average data for all four control panels (which were sawed from four different large panels). When this data reduction approach was followed, there was no degradation in tensile strength for system G1 from the 1 000 h or 3 000 h exposures in the humidity chamber, salt water, or alkali solution. Degradation after 10 000 h exposures was 15 % for 100 % humidity at 38 °C (100 °F), 12 % for salt water, and only 6 % for the pH 9.5 alkali solution. The coefficients of variation for the control samples were 2 % for humidity, 7.5 % for salt water, and 5 % for alkali. Thus, it was concluded that system G1 had tensile strength reductions similar to those for system G3 after 10 000 h (417 d) exposures to moist environments.

In most cases, the tensile strength of the E-glass/polymer systems was unaffected by 1 000 h or 3 000 h exposures to the humidity chamber, salt water, or alkali solution, but was significantly degraded by 10 000 h exposures. Therefore, the current results are not sufficient to predict the effects of longer term exposures. It must be concluded that additional data, either from longer term exposures, accelerated testing, or both, will be needed. Until additional data are available, conservative design values for tensile strength and failure strain must be used, particularly for system

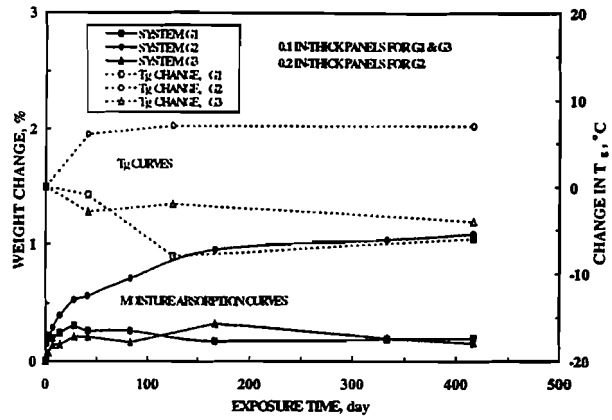

Fig. 3--Moisture absorption and change in glass transition temperature for systems G1, G2, and G3 as functions of exposure time in 100 % humidity at 38 °C (100 °F).

G2, to account for potential long-term moisture exposure effects.

Figure 3 shows plots of weight change and changes in the glass transition temperature for systems G1, G2, and G3 as functions of exposure time in the humidity chamber. The weight change is assumed to be due to moisture absorption. Although the moisture absorption for system G2 was not unusually high at around 1 %, it was 4 to 5 times higher than that for either system G1 or system G3. Also note that although most of the moisture absorption for system G2 occurred during the first 3 000 h (125 d) in the humidity chamber, the moisture content was still increasing after 10 000 h (417 d). Moisture absorption rates in the salt water and pH 9.5 alkali solutions were similar to those in the humidity chamber for each of the three E-glass/polymer systems. It is well documented that E-glass fibers are susceptible to tensile strength degradation when exposed to moisture. It is assumed that the tensile strength reductions measured for systems G1, G2, and G3 from the 100 % humidity at 38 °C (100 °F), alkali, and salt water exposures are due to this effect. System G2 absorbed significantly more moisture and therefore had larger strength reductions. Since elevated temperatures accelerate the degradation rate [Litherland et. al (1991) and Bank et. al. (1998)], the degradation for system G2 was much higher in the humidity chamber than for the

room temperature immersions in salt water or $CaCO_3$, even though the moisture absorption rates were similar.

Figure 3 shows that T_g for system G2 increased from the humidity chamber exposure, while T_g for systems G1 and G3 decreased. The T_g of system G2 increased because the 38 °C (100 °F) exposure advanced the cure state of the matrix. This offset any decrease in T_g due to moisture absorption. Systems G1 and G3 had fully cured matrices and therefore had a small decrease in T_g due to moisture absorption. The T_g for all three systems stabilized after 1 000 h to 3 000 h (42 d to 125 d) exposures. System G2 did show a small reduction in T_g due to the room temperature moisture absorption in the salt water and alkali solutions. However, the decrease did not exceed 5 °C. The biggest effect on T_g was for system G1 which had a 30 °C reduction in T_g after 3 000 h in the alkali solution. However, this was not a concern because no further reduction was observed after the 10 000 h exposure, the T_g was still over 40 °C higher than the maximum service temperature, and no effects on the hardness or SBSS were measured.

System G2 was the only E-glass/polymer system that had any significant reduction in short beam shear strength. It had reductions in SBSS of 10 % to 20 % after the 10 000 h humidity, salt water, and alkali solution exposures. System G2 also had a 12 % reduction in SBSS following 20 freeze/thaw cycles. The reductions in SBSS are consistent with the increased moisture absorption for system G2 as compared to systems G1 and G3.

Carbon/Epoxy Systems C1, C2, C3, and C4

The excellent environmental durability of carbon fibers was reconfirmed in this investigation. No significant reduction in Young's modulus, tensile strength, or failure strain was measured for any of the four carbon/epoxy systems after any exposure condition. The only notable change in tensile properties was a reduction in tensile strength and failure strain of approximately 15 % for system C2 following the 10 000 h exposure to 100 % humidity at 38 °C (100 °F). However, this system had a layer of epoxy applied to the panels after the panels were cured. Due to improper surface preparation, the bond strength of this layer of epoxy decreased during the 10 000 h humidity exposure. The epoxy layer debonded under the grip tabs during tensile testing and caused premature failures under the grip tabs.

Figure 4 demonstrates the most dramatic effect of the environmental exposures. The short beam shear strength of carbon/epoxy system C1 following the 100 % humidity, salt water, alkali, and freeze/thaw exposures was reduced by up to 50 % (for humidity exposure). System C4 was also affected by these exposures, but as Figure 4 demonstrates, to a much lesser extent. Mass measurements (Figure 5) indicated that system C1 absorbed at least three times as much moisture for any exposure time as any other carbon or glass system under evaluation. The large reduction in SBSS for system C1 was undoubtedly due to the high moisture absorption.

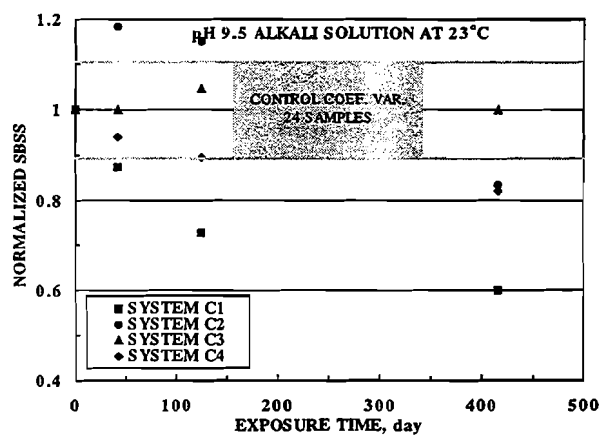

Fig. 4--Normalized short beam shear strength for systems C1, C2, C3, and C4 as functions of exposure time in pH 9.5 alkali solution at 23 °C (73 °F).

Although the SBSS data are a good indicator of changes in matrix properties, a reduction in SBSS is not expected to affect the performance of a column overwrap so long as there are no accompanying reductions in tensile properties. Thus, the primary concern of the high moisture

absorption of system C1 was the decrease in T_g. T_g for this system is normally around 65 °C (150 °F). However, as Figure 5 shows, T_g was reduced by moisture absorption to values as low as 44 °C (110 °F) following 20 freeze/thaw cycles or 50 °C (122 °F) after 3 000 h (125 d) in the alkali solution. Therefore, on a hot day the temperature of the column overwrap could exceed the matrix T_g. Under these conditions, the matrix may no longer provide adequate load transfer between fibers and the tensile strength could be degraded. Therefore, additional tensile tests were performed at 50 °C (122 °F) on control and exposed samples for system C1 to address this concern.

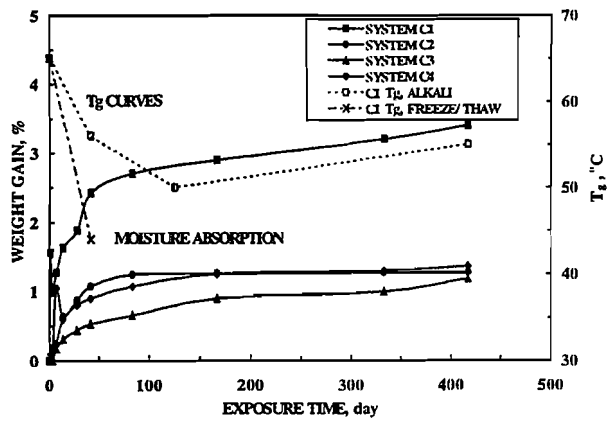

Fig. 5--Moisture absorption and glass transition temperature for systems C1, C2, C3, and C4 as functions of exposure time in pH 9.5 alkali solution at 23 °C (73 °F).

The elevated temperature tests showed that control samples having a T_g of at least 60 °C (140 °F) maintained at least 80 % of their room temperature [<27 °C (80 °F)] tensile strength when tested at 50 °C (122 °F). Samples exposed to 100 % humidity, 20 freeze/thaw cycles, or the pH 9.5 alkali solution and having a $T_g \leq 50$ °C (122 °F) had tensile strengths at 50 °C (122 °F) that were typically less than 60 % of the room temperature values. These large reductions in tensile strength at realistic service temperatures were unacceptable and system C1 was rejected by Caltrans due to its susceptibility to high moisture absorption.

The manufacturer for system C1 subsequently made modifications to the epoxy resin and resubmitted a new set of composite panels for durability testing. The 1 000 h exposures and property testing have been completed. As Figure 6 demonstrates, moisture absorption rates from the 100 % humidity at 38 °C (140 °F), salt water, and pH 9.5 alkali solution exposures were greatly reduced with the modified epoxy matrix. In addition, the glass transition temperature was much more stable with the modified epoxy matrix and was greater than or equal to 58 °C (136 °F) following all of the 1 000 h exposures. After 20 freeze/thaw cycles, the T_g with the modified epoxy resin was 67 °C (153 °F) as compared to 44 °C (110 °F) for the original resin. Finally, the effects of the moisture exposure environments on short beam shear strength were greatly diminished with the modified resin. Reductions in SBSS ranged from 13 % to 33 % after 1 000 h exposures with the original resin, but never exceeded 8 % with the modified resin. Thus, although 3 000 h and 10 000 h testing must be completed, 1 000 h data provide compelling evidence that the epoxy resin modification solved the moisture absorption problem.

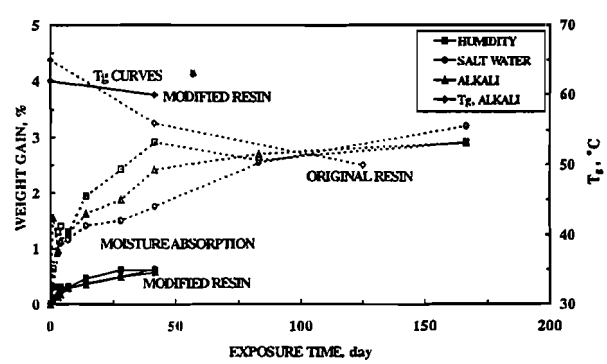

Fig. 6--Moisture absorption and glass transition temperature for system C1 with original and modified epoxy resins as functions of exposure time in moist environments.

SUMMARY AND CONCLUSIONS

Environmental durability testing is being performed on 13 composite systems that have been proposed to Caltrans for seismic retrofit of

bridge columns. 10 000 h exposures were completed for 7 systems (3 E-glass fiber/polymers and 4 carbon fiber/epoxies).

Most carbon/epoxy systems show excellent durability after 10 000 h exposures. However, one carbon/epoxy system had up to a 50 % reduction in short beam shear strength and a significant reduction in glass transition temperature associated with moisture absorption. The reduced glass transition temperature caused an unacceptable reduction in tensile strength at 50 °C. As a result of these test results, the manufacturer modified the epoxy matrix for this system which resulted in greatly reduced moisture absorption and improved stability in the glass transition temperature and mechanical properties.

E-glass/polymer systems were susceptible to tensile strength and failure strain reductions after exposure to moist environments. For most systems and environments this reduction was less than 20 % after 10 000 h exposures. However, one E-glass system had a 35 % reduction in tensile strength and failure strain after 10 000 h in 100 % humidity at 38 °C. This system also had a 20 % reduction in short beam shear strength after 10 000 h exposures to moist environments. These effects were attributed to higher moisture absorption for this system than for the other E-glass/polymer composites. None of the other E-glass/polymer system had a significant reduction in short beam shear strength in any environment.

Although the tensile strength and failure strain for all three E-glass/polymer systems were degraded to some extent after 10 000 h exposures in salt water or the pH 9.5 alkali solution, these effects were attributed to moisture exposure. No degrading chemical effects were attributed to exposure to salts or a pH of 9.5 for any system.

None of the carbon/epoxy or E-glass/polymer systems had a significant reduction in Young's modulus from the environmental exposures.

REFERENCES

ASTM G 53, "Standard Practice for Operating Light- and Water-Exposure Apparatus (Fluorescent UV-Condensation Type) for Exposure of Nonmetallic Materials" *1995 Annual Book of ASTM Standards*, ASTM, V. 14.02, 1203-1211.

ASTM D 1141, "Standard Specification for Substitute Ocean Water," *1995 Annual Book of ASTM Standards*, ASTM, V. 11.02, 27-28.

ASTM D 2247, "Standard Practice for Testing Water Resistance of Coatings in 100 % Relative Humidity", *1995 Annual Book of ASTM Standards*, ASTM, V. 6.01, 291-294.

ASTM D 2344, "Standard Test Method for Apparent Interlaminar Shear Strength of Parallel Fiber Composites by Short-Beam Method," *1995 Annual Book of ASTM Standards,* ASTM, V. 15.03, 43-45.

ASTM D 3039, "Standard Test Method for Tensile Properties of Polymer Matrix Composite Materials," *1995 Annual Book of ASTM Standards*, ASTM, V. 15.03, 114-123.

ASTM D 3045, "Standard Practice for Heat Aging of Plastics Without Load," *1995 Annual Book of ASTM Standards*, ASTM, V. 8.02, 248-252.

Bank, L. C., Gentry, T. R., Barkatt, A., Prian, L., Wang, F., and Mangla, S. R., "Accelerated Aging of Pultruded Glass/Vinylester Rods," in Saadatmanesh, H. and Ehsani, M. R., eds., *Fiber Composites In Infrastructure, Proceedings of Second International Conference on Composites in Infrastructure*, V. II, 423-437 (1998).

Chapman, W. et al, "Pre-Qualification Requirements for Alternative Column Casings for Seismic Retrofit," *California Department of Transportation* (1997).

Litherland, K. L., Oakley, D. R., and Proctor, B. A., "The Use of Accelerated Aging Procedures to Predict the Long Term Strength of GRC Composites,", *Cement and Concrete Research*, V. 11, 455-466 (1991).

Yilmaz, V. T., Lachowski, E. E., and Glasser, F. P., "Chemical and Microstructural Changes at Alkali-Resistant Glass Fiber-Cement Interfaces," *Journal of American Ceramic Society, ACS*, V. 74 No. 12, 3054-3060 (1991).

Seymour, R. B., "Influence of Long-Term Environmental Factors on Properties," in *Engineered Materials Handbook Volume 2: Engineering Plastics, ASM International*, 423-432 (1988).

Steckel, G. L., "pH Measurements on Concrete Bridge Columns," *The Aerospace Corporation Technical Report*, in press (1998).

Sultan, M., "Evaluating Advanced Composites for Applications in Transportation Structures," *SAMPE Journal*, V. 33 No. 3 (1997).

Sultan, M., Hawkins, G., and Sheng, L., "Caltrans Program for the Evaluation of Fiber Reinforced Plastics for Seismic Retrofit and Rehabilitation of Structures," in Proceedings of FHWA National Seismic Conference (1995).

Sultan, M., Sheng, L., and Steckel, G. L., "Evaluating Advanced Composites for Applications in Transportation Structures - A Program Review," in Proceedings of FHWA National Seismic Conference (1997).

Tremper, B., "Hardened Concrete: Corrosion of Reinforcing Steel," in Significance of Tests and Properties of Concrete and Concrete Making Materials, ASTM STP 169-A, ASTM, 220-229 (1966).

Typical Manufacturing Flaws in FRP Retrofit Applications

by Gary F. Hawkins, Eric Johnson and James Nokes
The Aerospace Corporation

FRP materials are being used to retrofit columns and rehabilitate concrete structures. There are three different manufacturing methods for applying FRP to concrete. Each method has the potential for creating debonds at the FRP-concrete interface and within the FRP itself. Thermography is a nondestructive evaluation technique which can image debonds below the surface of an FRP. Thermography was performed on columns which had been wrapped with FRP using three different methods to determine the size and frequency of debonding characteristic of that manufacturing method.

The results indicated that hand lay-up methods leave hand sized air bubbles at the concrete composite interface. Pre-cured shells leave large debonds in areas where the shells are not adequately secured during the cure of the adhesive. Machine wrap methods do not leave debonds on circular columns but may leave large debonds on rectangular columns if the flat side of the column is slightly concave. A discussion is also presented concerning the acceptable size of flaws in these applications.

Keywords: debonds, flaws, FRP, nondestructive evaluation, repair, stiffening, strengthening,

INTRODUCTION

In December 1995, the California Department of Transportation (Caltrans) formally initiated a program for the evaluation and qualification of advanced composite materials for seismic retrofit and rehabilitation of structures. The principal initial application of composites by Caltrans is as a casing or over-wrap on bridge columns for enhancing seismic resistance. Several composite manufacturers have developed composite casing systems which have potential for being cost effective relative to current steel casing designs. In April 1996, Caltrans issued pre-qualification requirements for alternative column casings for seismic retrofit. The requirements called for each potential bidder to wrap a full-scale column as a demonstration of their capability. These columns were tested using thermography to detect flaws hidden underneath the surface of the composite. This paper summarizes the types of flaws introduced by each of the different manufacturing techniques.

Composite Manufacturing Techniques for Over-wrapping Columns

When viewed in a very broad sense, there are three primary methods for over-wrapping columns: hand lay-up, pre-cured shells, and machine wraps. Each method has its own difficulties which result in the introduction of debonds which are unique to the type of manufacturing method. The methods are described below.

1) Hand Lay-Up

The hand lay-up system involves placing the uncured fabric on the column by hand. The fabric normally comes in wide rolls and is cut to a length that can be conveniently handled. The wide fabrics are normally infiltrated with liquid resin by dipping the cut length in a bath which is located near the base of the column. The

tacky, and possibly dripping, fabric is laid onto the column and spread by hand to smooth the fabric and release any trapped air.

A separate hand lay-up technique is very similar to wallpapering a wall. In this case, the fabric comes in 25 cm wide rolls with a paper backing. The resin is applied to the column using a traditional paint roller. The fabric is laid onto the column over the resin and smoothed by hand. The backing paper is removed and another coat of resin is applied directly on the fabric. The resin wicks into the fabric from both sides and is intended to fully infiltrate the fabric. In both cases the systems are allowed to cure at room temperature.

2) Pre-cured shells

In this method, shells with the same diameter as the column are manufactured in a factory environment. The shells are slit longitudinally so the shells can be opened wider than the diameter of the column. The shells are trucked to the job site for mounting on the column. After cleaning and preparing the column, the column is sprayed with adhesive in the area where the shell will be attached. The shell is opened along the split line either by hand or with the aid of a support. The shell is then slipped around the column. After releasing it from the support, the shell returns to its original shape and snaps onto the column. To build up the over-wrap to the proper thickness, this process is repeated by spraying adhesive on the mounted shell and snapping on additional shells. To reach the proper height, additional shells are butted up against each other vertically.

The shells are oriented such that the split lines never line up. For example, if four shells are required to make the proper thickness, the split lines would be located at 90 degree increments around the column. The location of the butt ends between the top of one shell and the bottom of the next are also staggered so any particular section contains, at most, one butt end through its thickness.

After all of the shells are on the column, cinching straps are tightened over the shells to squeeze out any excess adhesive and tighten the shells onto the column.

3) Machine Wrap

Two of the manufacturers use a machine to wrap the fibers directly from a spool onto the column. The matrix material has either been pre-impregnated into the fibers on the spool or the fibers are impregnated by dipping them into an epoxy bath just before they are wrapped onto the column.

The machines are constructed at the job site and are in the form of a circular track around the column. The machine is typically hung from chains which have been attached to the underside of the bridge. The spools of fiber and the epoxy bath rotate around the column following the circular track. The machine climbs up the chains and wraps the column with fibers.

THE THERMOGRAPHIC TECHNIQUE

Thermography is an established nondestructive evaluation technique for many materials. It is particularly well suited to the detection of the debonds and delaminations commonly found in composite structures. Thermography utilizes the effect these defects have on the thermal conduction characteristics of the material. The region containing a debond or delamination has a decreased thermal conductivity. Consequently, after heat is momentarily applied to the outside of the structure, the flawed areas cool more slowly (stay hot longer) than normal areas. An infrared camera images the temperature of the area and the flaws show up as hot spots on a cool background.

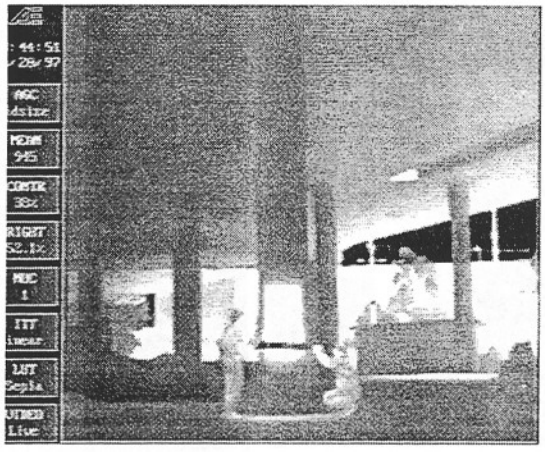

Figure 1. Infrared image of a column being heated.

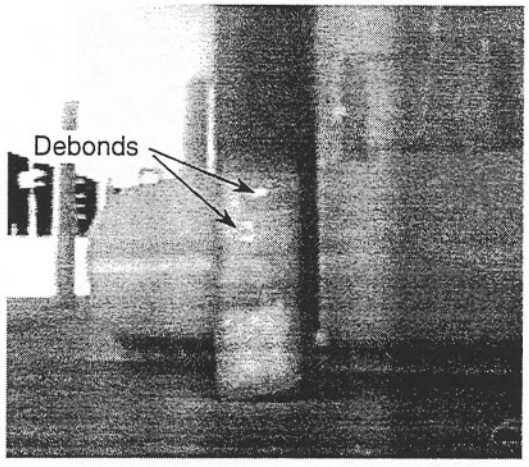

Figure 2. Infrared image of column 15 seconds after heating. Hand lay-up technique was used to apply FRP.

Figure 1 is the image of a column taken from an infrared camera. The two technicians in the scene are slowly lowering a heat source. The heat source consists of 12 quartz lamps (500 W/lamp) mounted on a semicircular frame. The frame has wheels that hold the lamps 10 cm away from the column. In these experiments, the heat source was rolled down the column a distance of 2 meters in 30 seconds. The surface temperature of the composite over-wrap never exceeded 40 degrees centigrade. This temperature cannot cause damage to the composite, yet readily exposes the debonds. Notice in the figure how the area above the heat source is hotter (shown as a lighter shade) then the unexposed areas below the heat source. After the heating is complete, the heat source is moved out of the scene and after a few seconds an image, such as in figure 2, is displayed by the infrared camera. The hot areas which correspond to debonds are displayed as a lighter color; consequently, it is quite easy to detect the debonds from these images.

The image of the debond takes a few seconds to "develop." This is the time required for the heat to flow through the material to the debond. At that time, the heat essentially stops flowing though the material because it is impeded by the debond. In normal areas the heat continues flowing into the concrete. The image of this debond becomes visible when the sensitivity of the infrared camera is enough to detect the temperature difference between the debonded and the normal areas.

As explained earlier, the development time is a function of the time it takes for heat to flow through the material to the debond. Consequently, analyzing the intensity of the debond image as it develops, yields information about the depth of the debond.

After it has developed, the amount of time that a debond is visible in the image is a function of the overwrap material's thermal conductivity. The image only remains visible until the heat flows from the hot area to the surrounding colder material. The heat flow rate is a function of the thermal conductivity of the material. The image in figure 2 was taken from a fiberglass shell that has a low thermal conductivity. Consequently, the image lingers for over a minute. In graphite materials the conductivity is much higher (some graphite have conductivity higher than that of copper). These images must be captured quickly before the hot areas blend into the background.

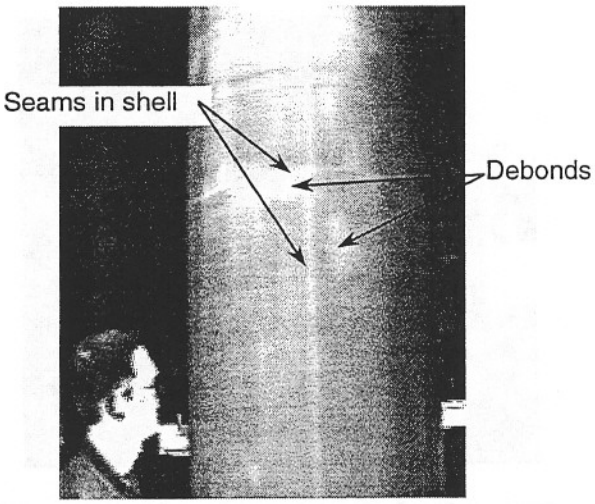

Figure 3. Debonds in a prefabricated shell.

TYPICAL FLAWS IN COMPOSITE OVERWRAPS

Hand Lay up Debonds

Figure 2 displays typical flaws for a hand lay-up system. When the wet fabric is laid on the column it is smoothed down and can trap air pockets. These air pockets become debonds when the material is cured. These debonds are typically 10 cm in diameter and randomly distributed over the column. If the workmen had a problem in a certain area, usually a cluster of small debonds of this sort is evident.

Prefabricated Sheet Debonds

Figure 3 shows an image of some debonds in a prefabricated shell. These tend to be close to the slits or the butt ends where the cinching straps have not been effective. In some cases these can get very large.

Figure 4 shows an area with an approximately 75 cm by 25 cm debond. This can be caused by the spray-on adhesive partially curing before the straps are cinched tightly. If the shells cannot slide with respect to each other, then they cannot tighten themselves to the column and a large debond results.

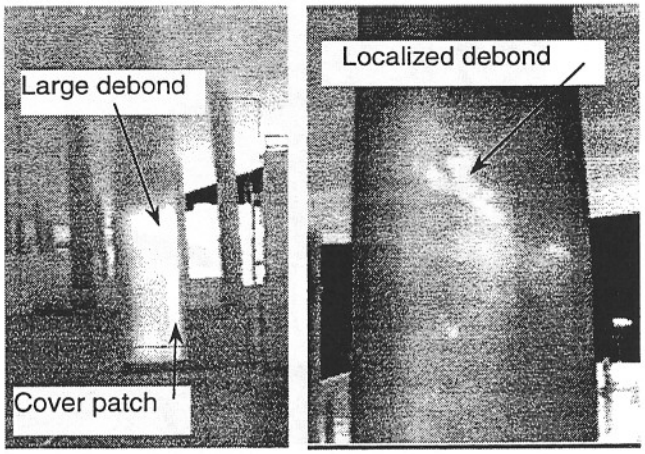

Figure 4. Large debond in a pre-fabricated shell

Figure 5 shows a core section taken from the area indicated in figure 4. The debond thickness, or in other words, the gap between the shells was approximately 3 mm.

Machine Wrap Debonds

No debonds of any significance have been found to date on machine over-wrapped circular columns. Laying down the fibers one strand at a time precludes the formation of large debonds on circular columns. There have been large debonds noted on machine wrapped rectangular columns though.

These seem to be caused by a slight concavity in the flat surface of the column, which causes the fibers to "bridge" from one high point to another.

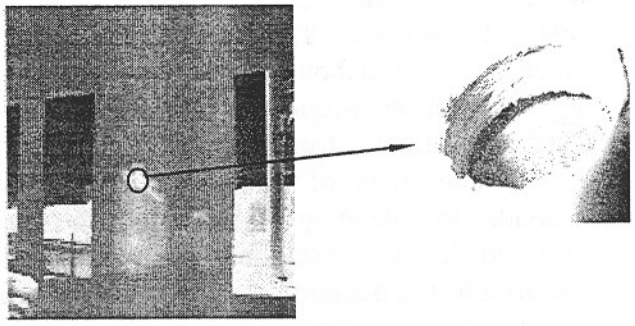

Figure 5. Core section of large debond discovered in prefabricated shell

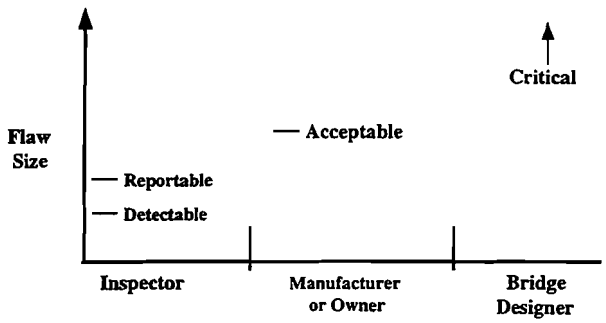

Figure 6. Notional graph indicating the size concerns of different disciplines

Acceptable Flaws

Any discussion of debonds always leads to questions about which debonds affect the performance of the structure. The question is viewed differently by three different types of people interested in the subject. The three types of people are the inspectors, the manufacturers or owners, and the bridge designers. The following discussion refers to the notional graph shown in figure 6.

The inspectors want their inspection technique to be capable of detecting all of the flaws that they need to report. Therefore, they design their equipment to detect flaws that are smaller then they need to report, which ensures they will detect all of the reportable flaws.

The manufacturer (and presumably the owner) knows that all manufacturing systems are capable of producing some flaws. These flaws are benign and inherent in the manufacturing procedure. In most cases, totally eliminating the flaws is impractical or would make the process too expensive. This is not to say that all flaws are acceptable though. If the flaws start to exceed a certain size or frequency it implies that the manufacturing procedure is getting out of control. Flaws below this size are an acceptable part of the manufacturing procedure but above this size they are unacceptable and indicative of sloppy work.

The bridge designer has a very difficult time determining the size of a flaw that is critical to the successful performance of the structure. This can only be done in a few cases where the fracture mechanics of the materials and the loading conditions are well known. To alleviate the calculation, the designer should make sure that his design is robust enough such that the acceptable flaws cannot affect the performance of the structure. That is to say, any flaw that is critical to the successful performance of the structure would have been eliminated because it was unacceptable to the manufacturer. This absolves the bridge designer from trying to calculate a critical flaw size. The designer only needs to show that flaws acceptable to the manufacturer are acceptable to him.

CONCLUSION

The three different manufacturing techniques leave different types of debonds in the final product. The large debonds must be repaired and the manufacturers should alter their process to avoid introducing them in the structure. In most cases the debonds are small and will not effect the performance of the structure. In these cases, the NDE results are used as a quality control mechanism so the manufacturer knows that the process is not out of control and the owner knows he has purchased a quality product.

In-situ Load Testing to Evaluate New Repair Techniques

W.J. Gold[1] and A. Nanni[2]

[1] Assistant Research Engineer, Univ. of Missouri – Rolla, Dept. of Civil Engineering

[2] V&M Jones Professor, Univ. of Missouri – Rolla, Dept. of Civil Engineering

Abstract

The lack of accepted design and construction specifications for new structural repair technologies may warrant on-site evaluations of these systems. Rapid in-situ load testing offers an effective way of assessing the performance of a strengthening system installed on an existing structure. This type of load test is unique in that it features concentrated loads of varying magnitude, cyclically applied over a short time period. The paper reports on a prototype system used by the University of Missouri at Rolla to evaluate flexural strengthening systems using bonded composite materials. The development of this system aims to provide a powerful tool in the assessment of new techniques and materials used in structural repair.

Introduction

Growing interest in the rehabilitation of existing buildings and infrastructure has spawned a need for innovative methods of structural strengthening. To this end, significant investigations into the use of such technologies as bonded carbon fiber reinforced polymer (CFRP) sheets to strengthen concrete structures have been conducted [1, 2]. However, design specifications and construction standards have not yet been developed for many of these new technologies. Due to this lack of recognized guidelines, there is reluctance among building professionals to implement such systems. In order to allow the building professional to use new technologies with confidence, an on-site performance assessment may be warranted.

This paper reports on in-situ load testing procedures that have been used by the University of Missouri at Rolla (UMR) to evaluate CFRP sheet bonding systems that are used to increase the flexural capacity of concrete beams and slabs. The paper gives specific reference to two-way flat plates or slabs; however, the methods described are easily extended to other CFRP strengthened concrete floor systems. UMR is currently working to extend the capabilities of this practice by developing general guidelines for evaluating new repair technologies.

Testing Objectives

Rapid in-situ load testing has been used in other countries to confirm structural performance compliance. This technology has been successfully adopted to evaluate strengthening systems involving the use of externally bonded CFRP [3, 4]. The purpose of the load test is to verify that the CFRP strengthening system will perform as intended. It should be emphasized that the test does not seek to provide a condition assessment of

the existing structure. The testing procedures described herein presume that the condition of the existing structure has been competently evaluated and that the purpose of the strengthening system is well defined.

The load test is designed to simulate the effect of design service load conditions on the in-situ structure with hydraulic jacks which are relatively easy to install and control (see Figure 1). Since the purpose of the CFRP strengthening system is to increase the flexural capacity, the loads are intended to induce the same critical bending moments in the structure as the design loads would produce. By directly applying the load on the actual in-situ structure, measurements may be used to evaluate the performance of the system. Furthermore, this type of load test offers immeasurable psychological benefits especially to clients and owners.

As a common example, the case of a two-way slab system strengthened for flexure is discussed in this paper. In the case of a slab, the design service load is typically a uniform downward (gravity) pressure acting over the entire surface of the slab. Since the load from the hydraulics is significantly more concentrated, it is only possible to simulate the effects of the design service load on small portion of the slab. The test, therefore, focuses on evaluating the slab on a unit width basis. Testing a small portion of the slab has the additional benefit of maintaining a higher degree of safety during testing. If any serious damage to the slab were to be done, this damage would be localized. The results of localized damage would be less likely to result in any catastrophic failure of the entire system.

Description of the Load Test

Testing Equipment

Based on the recommendations and experience of load test specialists operating in Europe, UMR has developed a prototype portable load test system. The system is contained in two boxes and is easily shipped to a site. Typical installation and setup of the equipment on-site can be completed in about four hours to five hours.

Figure 1 shows the loading apparatus. It consists of hydraulic jacks with pedestals, rigid extensions, and hoses, and a hydraulic pump contained inside the metal box. The electrically operated pump need not be removed from the box and is remotely controlled.

Figure 2 shows the front panel of the data acquisition box during field use. The top portion of the panel includes the control unit for signal processing/recording, a four-pen strip-chart recorder, and two display monitors. The bottom portion of the panel features cable connectors for pressure transducers, LVDT's, and strain gages.

Testing Configuration

The hydraulic jacks used to supply the test load must be provided with an adequate reaction. In a push-type test, as shown in Figure 1, the jacks react against the floor above using its dead load as counterweight. A pull-type test may be required in some situations where there is no surface above the tested slab to react against. In this test, the jacks pull against steel rods or chains from underneath the tested slab. A suitable reaction for the steel rods or chains must be provided.

In order to evaluate the slab on a unit width basis, it is necessary to provide a region of constant moment in the direction perpendicular to the primary span. This may be accomplished by providing two concentrated loads spaced a few meters apart along the perpendicular direction (see Figure 3). In this way, variation of the moment over the unit width may be minimized.

Furthermore, since the tested unit width is not isolated from the adjacent portions of the slab, it is necessary to increase the load magnitude to compensate for the additional stiffness provided by the adjacent portions. This stiffness contribution, known as load sharing, must be accounted for in the analysis of the system. This is most easily achieved by using a two-dimensional finite element analytical model. More details of the modeling are given in the "Analytical Modeling" section.

Slab deflection measurements are taken at several locations using LVDT's (see Figure 4). The strain distribution throughout the depth of the slab is measured with LVDT's and strain gages mounted on the top and bottom of the slab at the location of the critical section. The deflection measuring LVDT's may be mounted on stands resting on a stable floor (see Figure 5) or hung from the floor above.

Testing Procedure

The test loads are applied in quasi-static load cycles. Several initial cycles at low load levels are run to insure that the instrumentation and data acquisition system are functioning properly. The actual testing cycles are then started. Each cycle starts at zero load and involves at least four approximately equal load steps up to the maximum load level followed by at least two steps back to zero load. The load steps allow for monitoring the safety of the test; if deflection measurements do not stabilize at any load step, the test is halted. Deflection and strain measurements are recorded continuously during testing; Figure 6 shows a sample deflection history for two load cycles.

Evaluation

The evaluation of the system uses a combination of analytical modeling and test results. The analysis is used to theoretically predict the behavior of the CFRP system, and the evaluation is based on establishing agreement between the measured response and the theoretical behavior.

The first load cycles are maintained within the linearly elastic range of the structure and are used to verify that the CFRP is engaged. Measured strain values are used to determine the strain distribution through the depth of the slab. Based on material properties, this strain distribution may be converted to an internal moment (see Figure 7). This internal moment is then correlated with the moment determined through use of the analytical model for the given test load. If there is agreement between the two values, it may be concluded that the CFRP is engaged. It is typically possible to show that for the measured strain distribution, the section without CFRP is not capable of resisting the applied moment.

It is necessary that this portion of the evaluation be performed in the linearly elastic range of the slab. If the slab becomes non-linear, it would be necessary to determine the initial strain conditions. The initial strain conditions are mainly a result of dead load moment and strains induced by prestressing (if present). These strains are

difficult to assess with the required accuracy. Therefore, the structure is kept within the elastic range so that these effects may be neglected according to superposition.

The linearity of the structure is verified by plotting the measured load versus deflection data. Figure 8 shows sample load deflection data from a structure loaded in the linearly elastic range. The magnitude of the strains is not used to gauge the linearity of the structure, since the measured strains result from test loads only. The initial strains are not included and would need to be added for such an evaluation.

The second part of the evaluation involves applying loads above the elastic range nearer to the ultimate capacity of the slab. Ideally, this load level simulates 85 % of the factored load condition. Again, since the test is only loading a small region, there is little chance of doing any permanent damage to the structure. However, this load level will insure that the CFRP sheet will remain bonded at loads near ultimate. After a series of cycles at this higher load level, the structure is again loaded with cycles in the elastic range. An evaluation of the strain distribution is again performed to insure the CFRP is still engaged, and the repeatability of the strain measurements is checked.

Analytical Modeling

For a meaningful evaluation, it is necessary to analytically determine the magnitude of moments induced by the test loads. This requires an analytical model that accurately represents the in-situ situation. A preliminary two-dimensional finite element model is developed that represents the geometry of the tested span (See Figure 9). Some initial assumptions are made regarding the boundary conditions and material properties. It has been found that, in most situations, a linear model is sufficient. The preliminary model is used to design the load test. Once the load test has been performed, the model is refined based on test results.

There are two parameters of the analytical model that must be refined based on the load test results. The first is the fixity of the support conditions. This refinement is made by matching the measured shape of the elastic curve to the shape from analysis. The calculation procedure involves calculating the ratio of measured quarter-span deflection (δ_B and δ_D) to mid-span deflection (δ_C). The deflection values used are taken in reference to a point near the support (δ_A and δ_E) to eliminate any support displacements. The equation for calculating this ratio is given in Equation (1).

$$R = \frac{(\delta_B + \delta_D) - (\delta_A + \delta_E)}{2\delta_C - (\delta_A + \delta_E)} \tag{1}$$

The value of R resulting from this calculation is averaged for all measurements taken at the load levels within the elastic range of the materials. The boundary conditions on the edges perpendicular to the primary span are then adjusted in the model until the value of R calculated from analytical results corresponds to the experimental R value. The highest values of R corresponds to a span with pinned ends (no rotational stiffness) and the lowest R values indicate a fully fixed support condition. The boundary conditions on the edges parallel to the primary span may be adjusted similarly using the deflections measured in the transverse direction for Equation (1).

The second refinement is an adjustment of the modulus of elasticity for the concrete. This refinement is not necessary for evaluating bending moment magnitudes and distributions, but it is required to correlate deflection data to the analytical model. This adjustment is rather straightforward. The assumed modulus of elasticity ($E_{preliminary}$) is simply multiplied by the ratio of a deflection value determined from analysis with the assumed modulus ($\delta_{preliminary}$) to the corresponding measured deflection ($\delta_{measured}$). The value of mid-span deflection referenced to a point near the support will again be used for this calculation. The equation for calculating the refined modulus is given in Equation (2).

$$E_{refined} = \frac{(\delta_C - \delta_A)_{preliminary}}{(\delta_C - \delta_A)_{measured}} E_{preliminary} \tag{2}$$

The resulting of refined modulus of elasticity should be within reason for the in-situ concrete. Where possible, separate material coupon tests are conducted to verify the concrete material properties.

With the refinements made, the agreement between all measured deflections and deflections resulting from analysis are confirmed. Figure 10 shows sample elastic curves plotted from analysis and test data. The new refined model is then used to accurately determine the magnitudes and variations of bending moments in the slab. The moment induced at the critical section by the test loads may also be matched by a multiple of service loads. In this way, the level of load that the test load simulates is determined.

Conclusion

The lack of accepted design guidelines for the use of externally bonded FRP reinforcement will soon be overcome. In the interim, the practice of specific and well-designed in-situ load tests can be a powerful tool for the assessment of the rehabilitation work. Future use of load testing to investigate the durability of CFRP materials and to evaluate other new technologies is expected.

References

1. ACI Committee 440, 1996, "State-of-the-Art Report on FRP for Concrete Structures," ACI440R-96, Manual of Concrete Practice, ACI, Farmington Hills, MI, 68 pp.

2. El-Badry, M. (editor), August 1996, "Advanced Composite Materials in Bridges and Structures," Proceedings ACMBS-II, Montreal, Canada, pp. 1027.Barboni, M., A.

3. Benedetti, and A. Nanni, "Carbon FRP Strengthening of Doubly Curved Precast PC Shell," ASCE-Journal of Composites for Construction, Vol. 1, No. 4, Nov. 1997, pp. 168-174

4. A. Nanni, W. Gold, J. Thomas, and H. Vossoughi, "FRP Strengthening and On-site Evaluation of a PC Slab," Proceedings of the Second International Conference on Composites in Infrastructure, Volume 1. Tucson, Arizona. January 5-7, 1998, pp. 202-212

List of Figures

Figure 1: Photograph of hydraulic loading system used by UMR

Figure 2: Photograph of the data acquisition system used by UMR

Figure 3: Loading configuration to test a unit width of a slab

Figure 4: Typical location of instruments to measure deflections and strains

Figure 5: Photograph of instruments to measure deflections used by UMR

Figure 6: Sample load history data for two load cycles

Figure 7: Converting a linearly elastic strain distribution to moment

Figure 8: Sample linearly elastic load versus deflection data

Figure 9: A typical modeled region of the tested slab

Figure 10: Sample elastic curves from a refined analytical model and test data

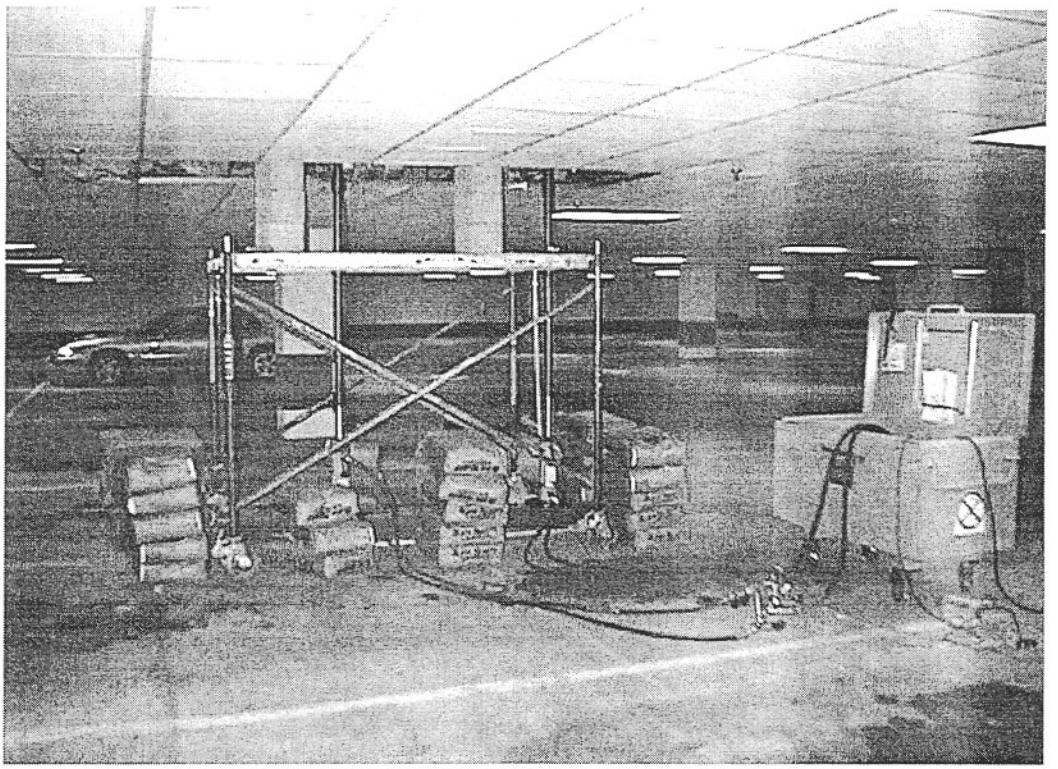

Figure 1: Photograph of hydraulic loading system used by UMR

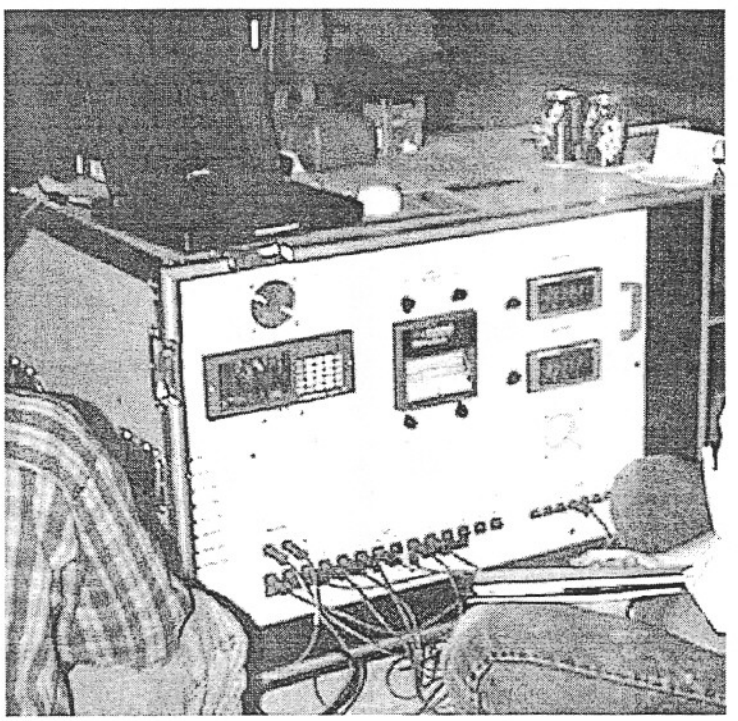

Figure 2: Photograph of the data acquisition system used by UMR

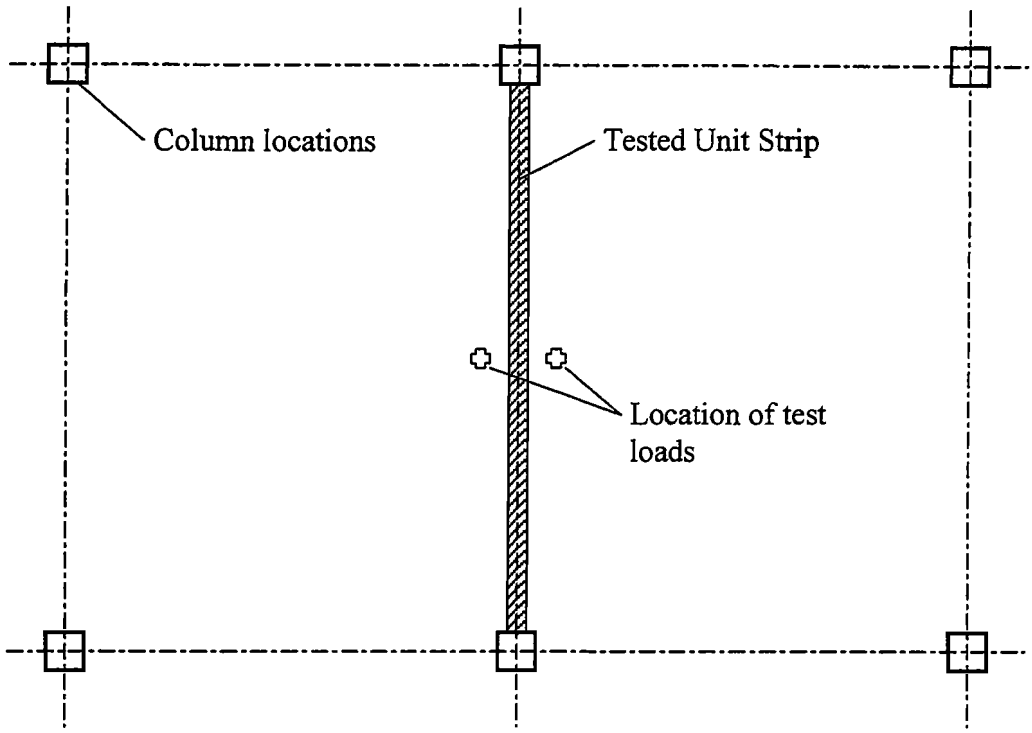

Figure 3: Loading configuration to test a unit width of a slab

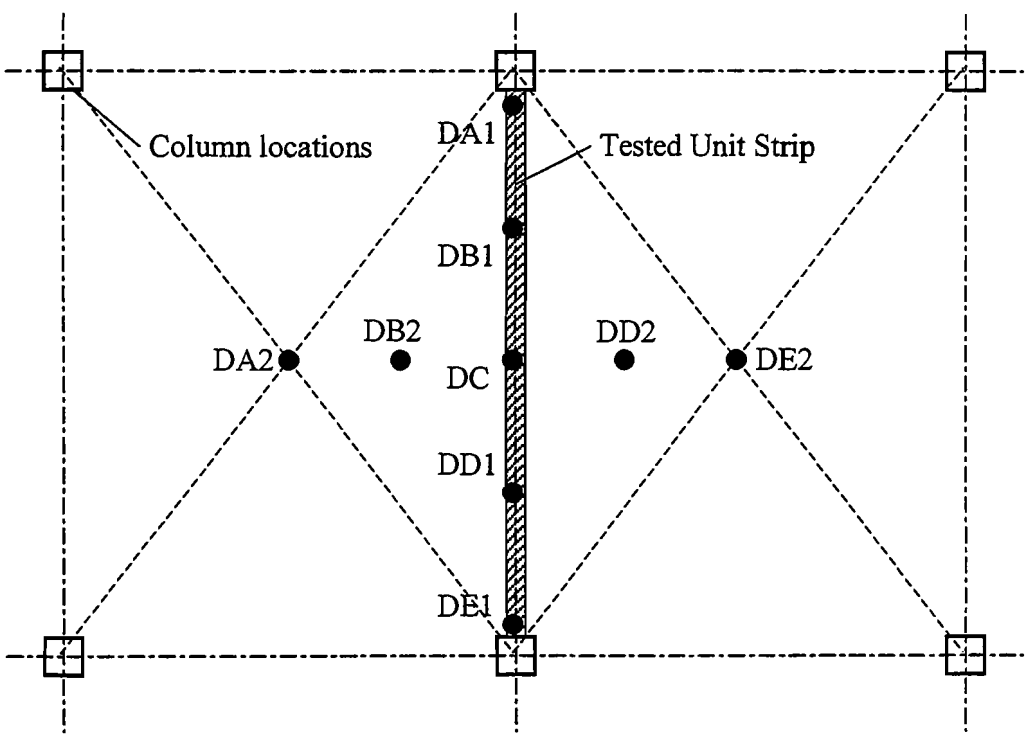

Figure 4: Typical location of instruments to measure deflections

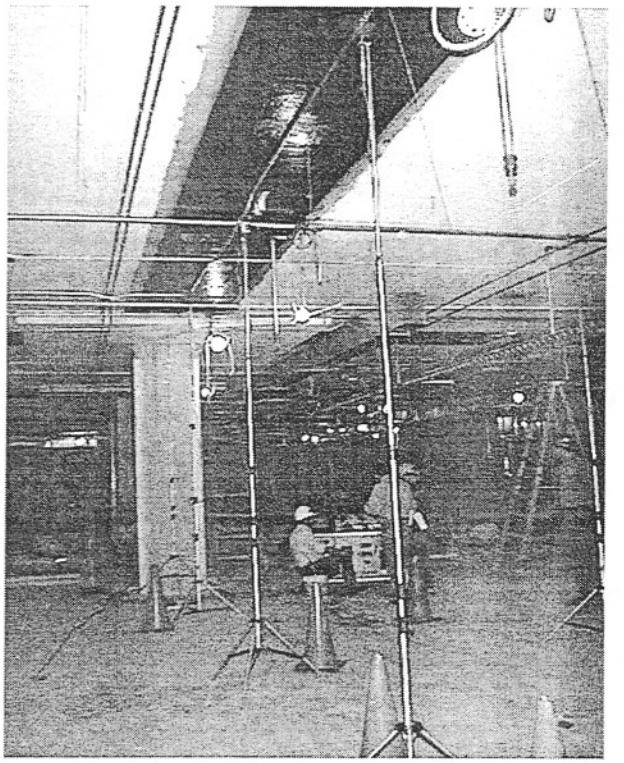

Figure 5: Photograph of instruments to measure deflections used by UMR

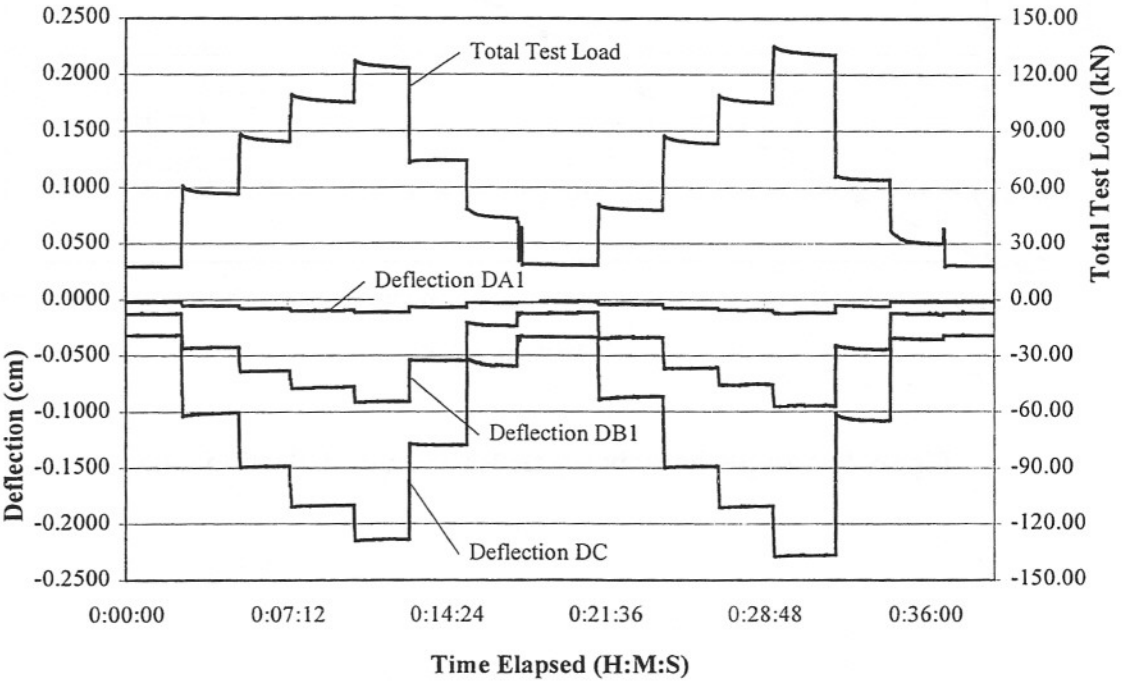

Figure 6: Sample load and deflection history data for two load cycles

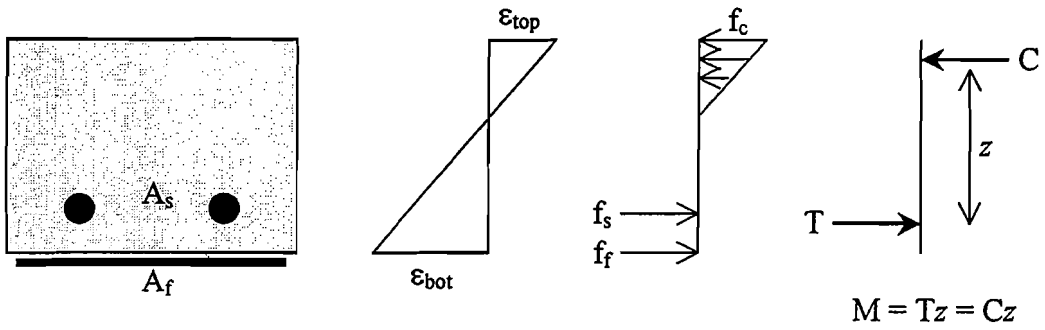

Figure 7: Converting a linearly elastic strain distribution to moment

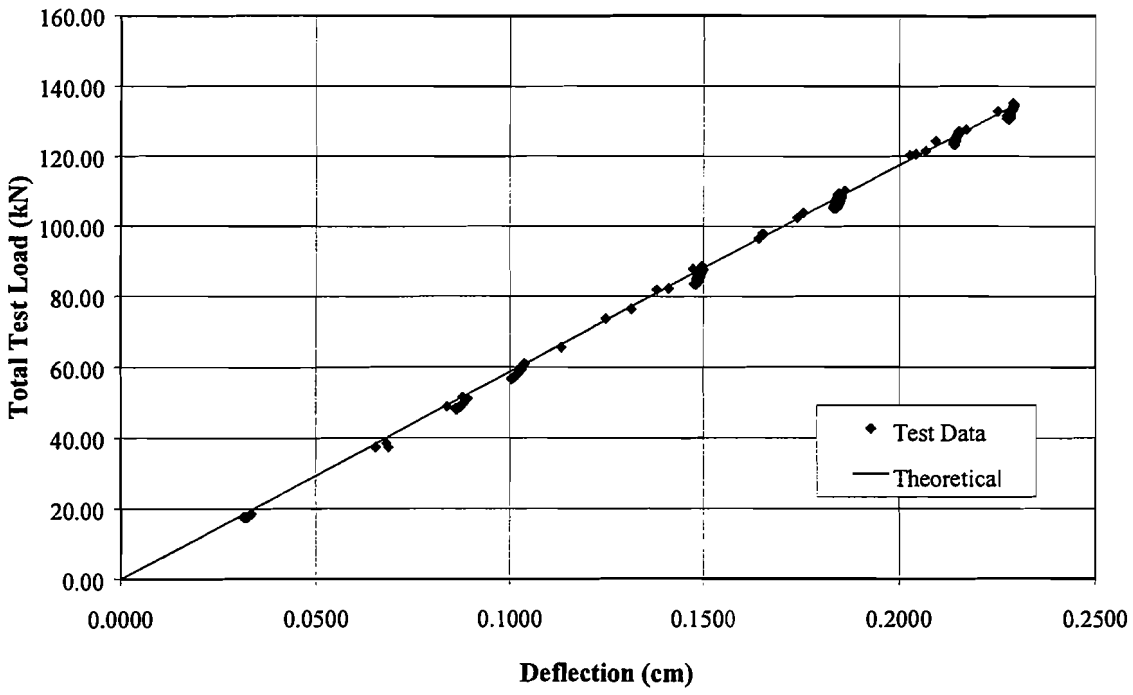

Figure 8: Sample linearly elastic load versus deflection data

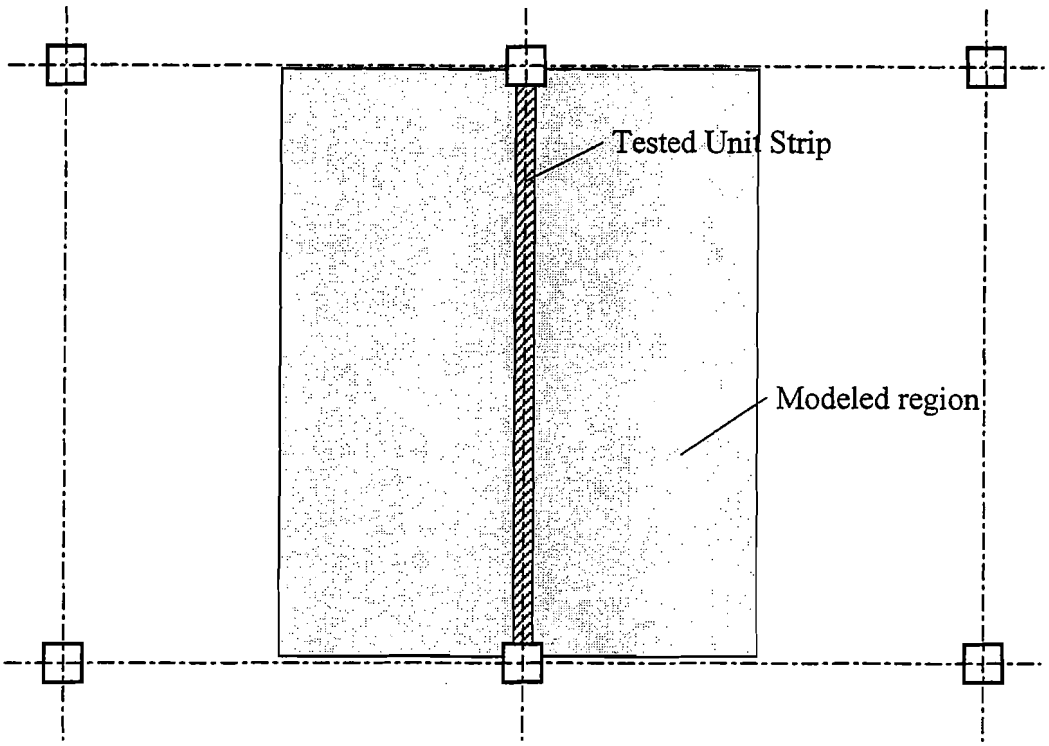

Figure 9: A typical modeled region of the tested slab

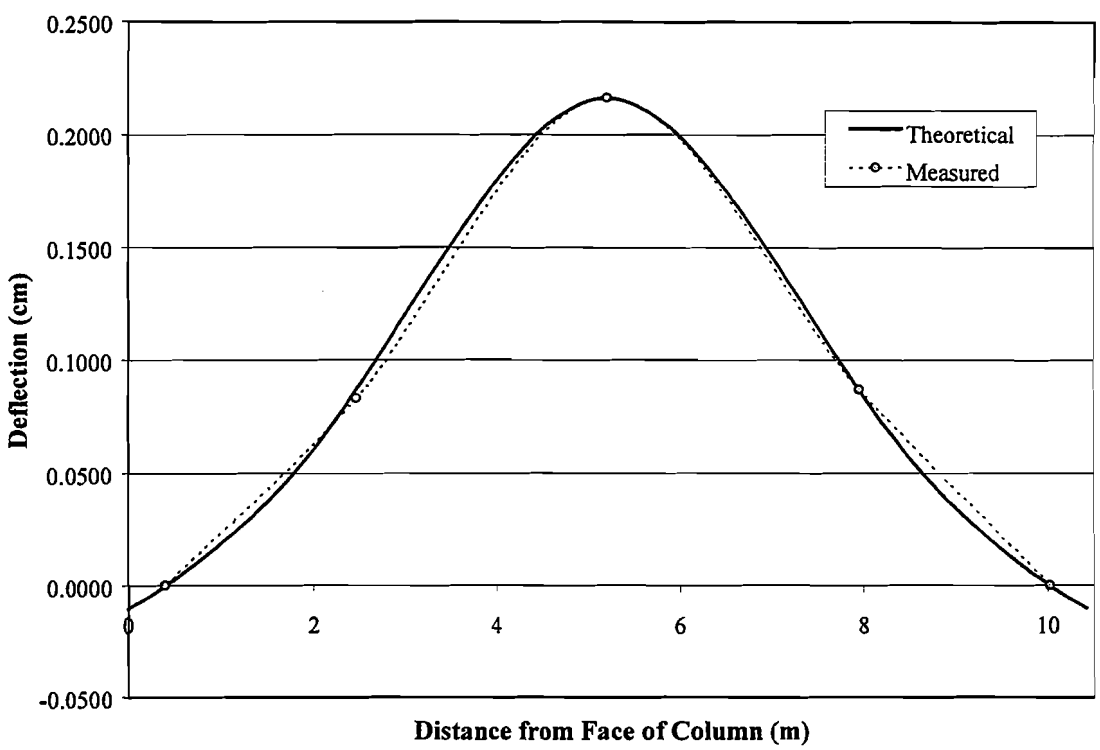

Figure 10: Sample elastic curves from a refined analytical model and test data

DRAFT DESIGN GUIDELINES FOR CONCRETE BEAMS EXTERNALLY STRENGTHENED WITH FRP

by Hota V.S. GangaRao and P.V. Vijay

West Virginia University

Abstract: *This paper proposes guidelines for the design of concrete beams reinforced internally with steel and externally with FRP. The beam static response is described in terms of strength, stiffness, ductility / deformability, compositeness between wrap / plate and concrete, and associated failure modes.*

1 INTRODUCTION

Factors responsible for the deterioration of reinforced concrete structures leading to reduced service life include chemical aging e.g., corrosion, and load induced stresses greater than design stresses. To avoid the high cost of structural replacement, to maintain structural integrity, and to extend the performance of constructed facilities, viable rehabilitation schemes have been suggested (Ichimasu et al., 1993, Baluch et al., 1995, Oehelers D.J., 1992; Ziraba et al., 1994, Priestley et al., 1992; Plevris et al., 1995; Saadatmanesh and Ehsani, 1991, Meier et al., 1993).

Thin carbon or glass fabric in conjunction with resin constitute a durable combination against temperature, moisture, weathering and chemical attack (GangaRao et al., 1995) and can be easily wrapped on at least three sides of structurally deficient beams to improve structural performance. Carbon fabric wrapping can provide some additional advantages over conventional strengthening methods, such as: reduction in corrosion related damage; minimization of structural joints; improvement in mechanical and fatigue properties; and maintenance of member integrity under stress reversals (Meier et al., 1993).

Since many field applications of reinforcing concrete beams through wrapping/plating with CFRP composites are expected in the future, a set of preliminary design specifications are suggested here.

2 OBJECTIVE

The objective of this paper is to provide some preliminary design specifications of concrete beams wrapped/plated with CFRP composites and subjected to static bending, shear, creep and aging. A partial list of design guidelines concerning the external strengthening (wrap / plate reinforcement) of concrete beams using FRP is outlined below.

1. Increase in nominal flexural strength resulting from FRP wrap/plate .
2. Increase in stiffness before and after cracking of concrete and yielding of steel.
3. Decrease in steel reinforcement stress.
4. Change in composite action between wrap and concrete under varying loads.
5. Evaluate failure modes based on wrap configuration.
6. Provide moment and shear capacity formulation.

7. Provide creep coefficients of steel reinforced concrete beams wrapped with carbon.
8. Suggest knock-down factors for strength and stiffness under aging (accelerated vs. natural) accounting for temperature, moisture and pH variations.
9. Suggest accelerated aging methodology and calibrate results of composites under accelerated aging with naturally aged materials.
10. Provide guidelines on calculating deformability factors.

3 BENDING, SHEAR, CREEP AND AGING

3.1 Nominal flexural strength

- The fiber orientation of the composite plays a key role in the moment increase.
- Wrapping/bonding with fabric/plate at the soffit of the concrete beam is more effective than at the sides (flexural strengthening at the sides contributes less than 5 % to the overall moment increase, GangaRao and Vijay, 1998).
- The increase in the moment capacity caused by wrapping/bonding concrete beams with FRP composites is a function of the number of layers of the fabric. For a given concrete section and number of fabric layers, the increase in strength is higher for beams with lower steel reinforcement.

3.2 Increase in stiffness

- Wrapping leads to an increase in the stiffness of concrete beams accounted for by the stiffness of the FRP and its lever arm.
- Steel reinforced concrete beams exhibit high rotation or deflection with very little moment enhancement after steel yielding. Beams reinforced with FRP fabric exhibit controlled increase in deflection after steel yielding, since FRP has considerable strength left after steel has yielded (yield strain is 0.002 for Grade 60 steel, whereas FRP fabric/plate ultimate strain varies between 0.015 and 0.030).

3.3 Decrease in steel stress

- Reduction in steel stress can be calculated by treating the FRP fabric/plate as an additional reinforcement sharing the tensile forces with the steel reinforcement and contributing towards the overall force equilibrium.
- In estimating the stresses induced in the external FRP fabric/plate and the internal steel reinforcement, suitable consideration should be given to the modular ratios, strain-compatibility, linearity in strain distribution and geometric location of the internal and external reinforcements.

3.4 Composite action between FRP wrap/plate and concrete

- Unless otherwise specified, perfect composite action (implying no slip at the bond-line) can be assumed between FRP wrap/plate and concrete for computations on moment capacity, shear capacity, bond strength and short term deflections.

3.5 Failure modes based on wrap configuration

- FRP fabric/plate should preferably consist of fibers oriented parallel to principal tension, as in beam bending or column confinement. Alternatively, fibers should be oriented to address bi-directional stresses as in the case of a slab .

- Design for shear strengthening of a concrete beam with FRP fabric/plate should preferably consist of fibers orientated at $\pm 45^0$ to the beam axis. This external strengthening should be placed over the sides and the entire depth of the beam in the shear zone.

- Tension and compression failure in a flexurally strengthened beam can be calculated based on *c/D* approach (ratio of the compression depth to the total depth). For example, for a steel reinforced and carbon wrapped beam, balanced strain conditions exist at a *c/D* ratio of 0.17 (obtained by treating strains in concrete, Grade-60 steel and carbon fabric as 0.003, > 0.002 and 0.015 respectively). If the moment resistance is developed by force equilibrium having $c/D < 0.17$, then primary tension failure (i.e., steel yields and fabric ruptures) is to be expected. On the other hand, if the moment resistance is developed by a force equilibrium having $c/D > 0.17$, then secondary compression failure (i.e., steel yields followed by concrete crushing, but no steel or fabric/plate ruptures) is to be expected.

- If a beam is expected to fail in flexural tension, then localized fabric/plate rupture or debonding is to be expected at high fabric/plate strains in the tension zone. The wrapping of transverse layers helps to prevent fabric debonding.

3.6 Moment and shear capacity

- The mechanical properties of FRP strips should be established based on the available standards, e.g., ASTM D 3039 for the tensile strength of FRP strips.

- For tension failure of a concrete beam with external FRP wrap/plate, the neutral axis depth should be calculated in the same way as for any reinforced concrete beam by accounting for the contribution of tension provided by the FRP in addition to the existing steel reinforcement. For a singly reinforced beam,

$$c = \frac{a}{\beta_1} = \frac{A_{st} f_y + A_{FRP} f_{FRP}}{0.85 f_c' b} \qquad (1)$$

$$M_n = \left[A_{st} f_y \left(d - \frac{a}{2} \right) + A_{FRP} f_{FRP} \left(D + \frac{t_{FRP}}{2} - \frac{a}{2} \right) \right] \qquad (2)$$

where,

a	=	ACI rectangular stress block depth;
A_{st}	=	area of tension steel;
A_{FRP}	=	area of FRP;
β_1	=	0.65 to 0.85, based on f_c';
c	=	depth of neutral axis;
d	=	effective depth of beam without wrap/plate;

D	=	total beam depth;
f_y	=	steel yield stress;
f_{FRP}	=	FRP failure stress;
M_n	=	nominal moment and
t_{FRP}	=	thickness of FRP at beam soffit.

For compression failure in a beam with external FRP wrap/plate, the unknown FRP strain can be expressed in terms of neutral axis depth and ultimate concrete strain ($\varepsilon_c = 0.003$). Alternately, the unknown strains in the fabric/plate can be assumed and solved in a few iterations as given by the equations (3) and (4). By accounting for the flexural steel reinforcement (compression and tension), one obtains the neutral axis depth and nominal moment (GangaRao and Vijay, 1998).

$$\left(0.85 f_c' b\right) a^2 +$$

$$\left(0.003 E_s A_s' - A_s f_y - \sum_{i=1}^{3} (A_{FRP})^i \left(Avg.\varepsilon_{FRP}\right)^i E_{FRP}\right) a - 0.003 \beta_1 d'' E_s A_s' = 0 \qquad (3)$$

$$M_u = 0.85 f_c' ab\left(d - \frac{a}{2}\right) + A_s' f_s' (d - d'') + \sum_{i=1}^{3} (A_{FRP})^i (Avg.\ f_{FRP})^i d^i \qquad (4)$$

where,

A_s'	=	area of compression steel;
$(A_{FRP})^i$	=	area of the ith segment;
$(Avg.\ f_{FRP})^i$	=	average FRP stress in the ith segment;
$(Avg.\ \varepsilon_{FRP})^i$	=	average FRP strain in i^{th} segment.
b	=	beam width;
d^i	=	lever arm to the *ith* segment considered;
E_{FRP}	=	modulus of elasticity of FRP;
E_s	=	modulus of elasticity of steel;

- The shear capacity of a concrete beams wrapped with FRP fabric is given by:

$$V_{FRP} = A_{FRP}\left(E_{FRP}\varepsilon_{FRP}\right)d \quad \text{for a fabric at } 0°/90° \text{ layup} \qquad (5)$$

$$V_{FRP} = \sqrt{2} A_{FRP}\left(E_{FRP}\varepsilon_{FRP}\right)d \quad \text{for a fabric at } 45°/135° \text{ layup} \qquad (6)$$

where,

A_{FRP}	=	area of unit fabric length (length along longitudinal direction);
ε_{FRP}	=	0.005,
V_{FRP}	=	shear carried by FRP.

3.7 Creep coefficient of concrete beams wrapped with carbon fabric

- For estimating the creep strains and deflections of steel reinforced concrete beams wrapped with carbon fabric, the creep-coefficient (C_t) of an identical beam without wrap can be used with suitable reduction factors. For example, the creep reduction factor (f_{cw}) of carbon wrapped concrete beams is found to be 0.3 (Ligday, 1996).

$$C_t = \frac{\text{creep.strain}}{\text{initial elastic strain}} = f_{cw}(\gamma_c)C_u \qquad (7)$$

where, γ_c = combination of reduction factors given by ACI-209.

3.8 Knock-down factors for strength and stiffness under aging

Reductions in strength and stiffness of the FRP strengthened/rehabilitated concrete beams should be expected during the service life of the structure. Unless otherwise known, knock-down factors for strength and stiffness due to aging under the influence of temperature, stress, moisture and pH variations should be between 0.7 to 0.9 based on the severity of the related parameters.

3.9 Accelerated aging methodology and calibration

Accelerated aging methodologies can be used for predicting the long-term mechanical properties of FRP wrap/plate used for external strengthening of concrete beams. For example, correlation of such accelerated results with natural weathering under in-service conditions of a structure can be carried out with Proctor's (1985) accelerated aging methodology explained below:

STEP 1

Subject the composite specimens to either of the following conditioning scheme for 6 to 7 evenly spread different temperatures between T = 245 °K (-18 °F, low temperatures slow down aging but cause brittle failure) to T = 340 °K (150 °F, below glass transition temperature):

- Accelerated aging (wet conditioning);
- Accelerated stress corrosion.

STEP 2

Plot strength and stiffness loss curves (non-linear curves conforming to some power law, e.g., $S = S_o + mt^n$) versus aging period t.

STEP 3

Plot the curves in step 2 for an Arrhenius type relationship, i.e., $A = A_o \exp(-\Delta E/RT)$

- Plot the logarithm of the time to reach particular strength values, e.g., 600 MPa (87 ksi) or stiffness values, e.g., 45 GPa (6.5 Msi) versus the inverse of temperature.
- Repeat for various values of strength or stiffness to obtain a family of curves.

STEP 4

Normalize the curves in step 3 into 1 single curve by:

- Selecting a reference temperature, say 294 °K (70 °F).
- Plotting the ratio of the logarithm of the time taken by the composite strength or stiffness to fall to a given value at T °K to the logarithm of the time taken to fall to that value at the reference temperature, versus $1 / T$. The time is read from the curves plotted in step 2.

STEP 5

- The normalized Arrhenius plot gives one overall picture of the relative acceleration of strength or stiffness loss at different temperatures.
- From the known time-scale shift (i.e., plot of Step 4), changes expected over long periods under lower service temperatures can be predicted by considering strength loss data from naturally weathered samples, mean annual temperature and other factors (say, moisture, freeze-thaw and pH level) as a basis for calibration.

3.10 Deformability / Ductility

The deformability index defined below can be used for evaluating the energy-absorbing characteristics of concrete beams reinforced with composite wrap/plate. The deformability index is the ratio of the energy or area under the moment-curvature curve at ultimate to that at a reference curvature which depends on the function of the structure, e.g., bridge deck versus building slab. The reference curvature should be limited to $0.006/d$, which is based on serviceability constraints of crack width and deflection, resulting in a deformability index of 4 or higher (GangaRao and Vijay, 1998, Vijay and GangaRao, 1997).

4 CONCLUSIONS

This paper proposed design guidelines for moment, shear, stiffness, creep, knock-down factors and deformability of concrete beams externally reinforced with FRP composites. These guidelines are based on research conducted at West Virginia University and other results referenced below.

REFERENCES

American Concrete Institute (1995), *Building Code Requirements for Reinforced Concrete and Commentary,* ACI 318R-95, Detroit, Michigan.

Baluch, M.H., Ziraba, Y.N., Azad, A.K., Sharif, A., Al-Sulamani, G.J and Basunbul, I.A. (1995), "Shear Strength of Plated RFC Beams," *Magazine of Concrete Research*, Vol. 47, No. 173, pp. 369-374.

Chajes, M.J., Januzska, T.F., Mertz, D.R., Thomson , T.A. Jr., and Flench, W.W., Jr. (1995), "Shear Strengthening of Reinforced Concrete Beams Using Externally Applied Composite Fabrics," *ACI Structural Journal*, Vol. 92, No. 3, pp. 295-303.

Chajes, M. J., Thomson, Jr., T. A., and Tarantino, B. (1995), "Reinforcement of concrete structures using externally bonded composite materials," *2nd Int. Symp. on Non-metallic (FRP) Reinforcement for Concrete structures (FRPRCS),* August 23-25, Ghent, Belgium.

Faza, S.S., and GangaRao, H.V.S. (1993), "Theoretical and Experimental Correlation of Behavior of Concrete Beams Reinforced with Fiber Reinforced Plastic Bars," *Fiber Reinforced-Plastic Reinforcement for Concrete Structures,* International Symposium, edited by Nanni, A. and Dolan, C.W., ACI SP-138, pp.599-614.

GangaRao, H.V.S. and Vijay, P. V. (1998), "Bending Behavior of Concrete Beams Wrapped with Carbon Fabric," *ASCE J. of Structural Engg.,* Vol. 124, No. 1, pp. 3-10.

GangaRao, H.V.S., Vijay P.V., and Dutta, P.K. (1995), "Durability of Composites in Infrastructure," *CORROSION-95,* Paper No. 550, The NACE International Annual Conference and Corrosion Show.

Ichimasu, H., Maruyama, M., Watanabe, H., and Hirose, T. (1993), "RC Slabs Strengthened by Bonded Carbon FRP Plates, Part-1 Laboratory Study and Part-2 Applications," *Fiber-Reinforced-Plastic Reinforcement for Concrete Structures*, International Symposium, Nanni, A. and Dolan, C.W., editors, ACI SP-138, pp. 933-970.

Jaeger, L.G., Tadros, G. and Mufti, A.A. (1995), "Balanced section, ductility and deformability in concrete with FRP reinforcement," Research Report submitted in Joint US - Canadian Meeting at West Virginia University.

Javed Sara, Kumar V.S. and GangaRao, H.V.S. (1996), "Experimental Behavior of Beams with Externally Bonded Carbon Fiber Tow Sheets," *Composites Institute 51st Annual Conference & Exposition '96,* pp. 3E1-3E7

Ligday F.J., Kumar S.V., and GangaRao H.V.S. (1996), "Creep of Concrete Beams with Externally Bonded Carbon Fiber Tow Sheets," *Advanced Composite Materials in Bridges and Structures 2nd Int. Conf.,* Montreal, Quebec, pp. 513-518.

Mander, J.B, Priestly, M.J.N., and Park, R. (1988), "Observed Stress-Strain Behavior of Confined Concrete," *ASCE J. of Structural Engineering*, Vol. 114, No. 8, pp.1827-1849.

Meier Urs, Deuring, M., Meier, H., and Schwegler, G. (1993), "Strengthening of Structures with Advanced Composites," *Alternative Materials for the Reinforcement and Prestressing of Concrete,* Clarke, J.L., ed., Blackie Academic and Professional, Chapman & Hall, Glasgow, pp. 154-171.

Meier, Urs (1992), "Carbon Fiber-Reinforced Polymers: Modern Materials in Bridge Engineering," *Structural Engineering International,* 1/92, International Association for Bridge and Structural Engineering, CH-8093, Zurich, Switzerland, pp. 7-12.

Muszynski, C. and Sierakowski, R. L. (1995), *50th Annual Conference,* Composites Institute, The Society of the Plastics Industry, Inc. January 30-February 1.

Neville, A.M. (1971): "Hardened Concrete: Physical and Mechanical Aspects", American Concrete Institute, pp.143-173.

Nikolaos, P., Triantafillou, T.C. and Veneziano, D. (1995), "Reliability of RC Members Strengthened with CFRP Laminates," *ASCE Journal of Structural Engineering*, Vol. 121, No. 7, pp. 1037-1044.

Oehlers, D.J. (1992), "Reinforced Concrete Beams with Plates Glued to their Soffits," *ASCE Journal of Structural Engineering*, Vol. 118, No. 8, pp. 2023-2038.

Priestly, M.J.N, Seible, F., and Fyfe, E. (1992), "Column Seismic Retrofit Using Fiberglass/Epoxy Jackets," *Advanced Composite Materials in Bridges and Structures*, edited by K.W. Neale and P. Labossiere, Canadian Society for Civil Engineering, pp. 287-298.

Proctor B.A. (1985), *The long-term Behavior of Glass Fiber Reinforced Composites,* Pilkington Publishers.

Rodriguez M. and Park, R. (1994), "Seismic Load Tests on Reinforced Concrete Columns Strengthened by Jacketing," *ACI Structural Journal*, Vol. 91, No. 2, pp. 150-159.

Saadatmanesh, H., and Ehsani, M.R. (1991), "RC Beams Strengthened with GFRP Plates-I, Experimental Study," *Journal of Structural Engineering*, Vol. 117, No. 11, pp. 3417-3433.

Tonen Corporation (1994), *Forca Tow Sheet Process Application Guidelines,* Japan

Vijay P.V., Kumar S.V., and GangaRao H.V.S. (1996), "Shear and Ductility Behavior of Concrete Beams Reinforced with GFRP Bars," *Advanced Composite Materials in Bridges and Structures 2nd Int. Conf.,* Montreal, Quebec, Canada.

Vijay P.V. and GangaRao H.V.S. (1996), "A Unified Limit State Approach Using Deformability Factors in Concrete Beams Reinforced with GFRP Bars", *Materials for the New Millennium*, ASCE 4th Material Conf., Vol. 1, Washington D.C., pp. 657-665.

Ziegahn, K.-F., Krause, H. H. and Schmitt, D. (1989), "Effects of Airborne Pollutants on Deterioration and Aging Behavior of Materials," *J. Environmental Sciences,* March/April.

Ziraba, Y.N,, Baluch, M.H., Basunbul, I.A., Sharif, A.M., Azad, A.K., and Al-Sulaimani, G.J. (1994), "Guidelines Toward the Design of Reinforced Concrete Beams with External Plates," *ACI Structural Journal*, Vol. 91, No. 6, pp. 639-646.

CHAPTER 4

WORKSHOP ORGANIZATION

NIST Workshop on Standards Development for the Use of Fiber Reinforced Polymers for the Rehabilitation of Concrete and Masonry Structures
Jan 7-8, 1998, Tucson, Az.

AGENDA

Wednesday Jan. 7, 1998

100-115	Registration	NIST Staff
115-130	Workshop objectives	Dat Duthinh
130-200	Quality control program for Caltrans field applications of FRP	Jim Roberts
200-230	Design and Detailing of FRP Rehab System	Frieder Seible
230-300	Standards, durability and test methods for materials, manufacturing and quality control in repair	Vistasp Karbhari
300-330	Industry perspective on composite column casing specifications	Gloria Ma
330-400	In-situ load testing	Tony Nanni
400-430	Coffee break	
430-500	Overview of seismic strengthening of concrete columns and beams	H. Saadatmanesh
500-530	Standards for flexural strengthening using FRP	H. Ganga Rao
530-600	Research needs for concrete strengthening	Edward Fyfe
600-630	Flaws in composite retrofit discovered in non-destructive evaluation	Gary Hawkins

Thursday Jan 8, 1998

800-1000	Working groups	
1000-1030	Coffee break	
1030-1200	Working groups	
1200-115	Lunch break	
115-215	Presentation by group chairs and general discussion	
215-230	Closing remarks	Dat Duthinh

NIST Workshop on Standards Development
for the Use of Fiber Reinforced Polymers
for the Rehabilitation of Concrete
and Masonry Structures
Jan 7-8, 1998, Tucson, Az.

QUESTIONNAIRE

1. What issues would you like the workshop to address ?

2. What areas are mature enough for Standards development (with the understanding that Standards are continually evolving in response to improved knowledge) ?

3. What areas still need further research before Standards should be attempted ? What are the knowledge gaps that need to be filled ?

4. Do you have a vision of what the Standards should look like? Performance based, prescriptive, or hybrid ?

5. Do you have any recommendation for NIST 's role in Standards development and basic research on this topic ?

6. Please describe briefly your own research program or list relevant publications.

Please fax or e-mail answers by December 24, 1997 to:

Dat Duthinh, Ph.D., P.E.
National Institute Standards and Technology
Structures Division, BFRL
Building 226, Room B158
Gaithersburg, MD 20899
Tel: (301) 975-4357
Fax: (301) 869-6275
e-mail: dduthinh@nist.gov

Thank you.

NIST Workshop on Standards Development for the Use of Fiber Reinforced Plastics for the Rehabilitation of Concrete and Masonry Structures
Jan 7-8, 1998, Tucson, Az.

LIST OF INVITED PARTICIPANTS:

Professor Oscar Barton
Dept. of Mechanical Engg.
U.S. Naval Academy
Annapolis, Md.
410 293 6510 fax: 2591
obarton@nadn.navy.mil

Professor Mohammad R. Ehsani
Depart. of Civil Engg. & Engg. Mechanics
Bldg. 72, Room 206
University of Arizona
Tucson, AZ 85721
tel: 520 621 6589 fax: 520 621 2550
ehsani@ccit.arizona.edu

Professor H.V.S. Ganga Rao
Constructed Facilities Center
West Virginia University
Morgantown, WV, 26506-6103
tel: 304 293 7608 fax: 304 293 7459
gangarao@cemr.wvu.edu

Professor Vistasp Karbhari
Division of Structural Engineering
University of California at San Diego
La Jolla, CA 92093-0085
tel: 619 534 6470 fax: 619 534 6373
karbhari@ames.ucsd.edu

UNIVERSITIES

Professor Antonio Nanni
Dept. of Civil Engineering
University of Missouri-Rolla
1870 Miners Circle
Rolla, Mo 65409-0030
tel: 573 341 4553 fax: 573 341 4729
nanni@umr.edu

Professor Hamid Saadatmanesh
Dept. of Civil Engg. & Engg. Mechanics
University of Arizona, Bldg. 72, Room 206
Tucson, AZ 85721
tel: 520 621 2148 fax: 5212
hamid@ccit.arizona.edu

Professor Frieder Seible
Division of Structural Engineering
University of California at San Diego
La Jolla, CA 92093-0085
seible@ames.ucsd.edu

Professor Yan Xiao
Department of Civil Engineering
University of Southern California
Los Angeles, CA 90089-2531
Tel. 213 740 6130 Fax: 213 744 1426
yanxiao@rcf.usc.edu or
yanxiao@almaak.usc.edu

LIST OF INVITED PARTICIPANTS:

Dr. Dat Duthinh
Structures Division
Building and Fire Researach Lab
NIST, Gaithersburg, Md. 20899
Tel. 301 975 4357 Fax 869 6275
dduthinh@nist.gov

Dr. John Gross
Structures Division
Building and Fire Researach Lab
NIST, Gaithersburg, Md. 20899
Tel. 301 975 6068 Fax 869 6275
john.gross@nist.gov

Mr. Orange Marshall
US Army Construction Engg. Research Lab.
P.O. Box 9005
Champaign, IL 61826-9005
tel: 217 373 6766 fax: 217 373 6732
o-marshall@cecer.army.mil

Mr. Steven Morton
Ohio Dept. of Transportation
Room 516, 25 S. Front St.
Columbus, Ohio 43215
Tel. 614 466 4318 Fax: 614 752 4824
e-mail: smorton@odot.ohio.gov

GOVERNMENT

Mr. James Roberts
Director, Engg Services Center
California Dept. of Transportation
101 30th Street
Sacramento, CA 95816
or POBox 942 874 MS #9
Sacramento, CA 94274 0001
tel: 916 227 8808 fax: 8251

Dr. John Scalzi
NSF Directorate for Engineering
4201 Wilson Boulevard
Arlington, VA 22230
tel: 703 306 1361 fax: 0291
scalzi@ nsf.gov

Mr. Benjamin M. Tang
FHWA Bridge Division HNG-32
400 7th St. SW
Washington, DC 20590
Ph. 202 366 4592 Fax: 202 366 9981
Ben.Tang@fhwa.dot.gov

Dr.H. Felix Wu
Program Manager, ATP
NIST, Gaithersburg, MD 20899-0001
Tel: (301) 975-4685 Fax: (301) 548-1087
e-mail: felix.wu@nist.gov

LIST OF INVITED PARTICIPANTS:

Mr. Craig Ballinger
Craig Ballinger & Assoc.
314 Ayito Road SE
Vienna, VA 22180-5983
Ph. 703 938 1057 Fax: 703 938 1252

Mr. Steven Cauffman
Research & International Programs
CERF
1015 15 th St. NW Suite 600
Washington DC 2005-2605
Tel. 202 842 0555 Fax: 202 682 0612
jmeyer@cerf.asce.org www.cerf.org

Mr. Grant Corboy
Hardcore Composites, Ltd.
801 East 6th St., Newcastle, DE 19720
Ph. 302 326 5905 Fax: 302 326 0620
gcorboy3@aol.com

Mr. Edward Fyfe, President
FyfeCo., LLC
6044 Corner Stone Court W., Suite C
San Diego, CA 92121-4730
Ph. 619 642 0694 Fax: 619 642 0947
fyfeco@earthlink.net

Dr. Gary Hawkins
The Aerospace Corporation
Mail stop M4 / 945
P.O. Box 92 957
Los Angeles, CA 90 009
Ph. 310 336 7379
Fax: 310 336 8821
g.hawkins@aero.org

Mr. Fred Isley
Hexcel Corporation
5794 West Las Positas Boulevard
PO Box 8181
Pleasanton, California 94588-8781
Ph. 510 847 9500 x4493 Fax: 510 734 9042

INDUSTRY

Mr. James Korff
XXsys Technologies, Inc.
6619 Viewridge Avenue
San Diego, CA 92123
tel: 619 974 8200 X233 fax: 619 974 8208
jkorff@xsys.com

Dr. Gloria Ma, CEO
XXsys Technologies, Inc.
6619 Viewridge Avenue
San Diego, CA 92123
tel. 619 974 8200 X226 fax 619 974 8208
gma@xxsys.com

Mr. Barry Olson
General Manager
CMI, Inc.
1401 S. Santa Fe Avenue
Compton, CA 90221
tel: 310 223 2690 fax: 310 223 2694

Dr. Gary Steckel
The Aerospace Corp.
2350 E. El Segundo Blvd.
El Segundo, CA 90245-4691
Mail: P.O. Box 92957
Los Angeles, CA 90009-2957
Phone: (310) 336-7116, Fax: (310)
336-5860
gary.steckel@aero.org

Mr. Milan Vatovec
Simpson, Gumpertz & Heger, Inc.
297 Brodway, Arlington, Mass. 02174-5310
Ph. 781 643 2000 fax 2009

WORKING GROUP PARTICIPANTS

Columns	
Grant Corboy	
Dat Duthinh	Secretary
Roger Green (XXsys)	
Vistasp Karbhari	
James Korff	
Gloria Ma	
Barry Olson	
James Roberts	
Hamid Saadatmanesh	Chair
Milan Vatovec	
Yan Xiao	Co-chair
Beams	
Craig Ballinger	
Edward Fyfe	Co-chair
Hota GangaRao	
John Gross	Secretary
Steven Morton	
Antonio Nanni	Chair
Fred Policelli (XXsys)	
Gary Steckel	
Benjamin Tang	
Walls	
Oscar Barton	Secretary
Mohammad Ehsani	Co-chair
Gary Hawkins	
Fred Isley	
Orange Marshall	Chair