NIST GCR 95-673

Enhancements to Program IDARC: Modeling Inelastic Behavior of Welded Connections in Steel Moment-Resisting Frames

Prepared by: Dr. Sashi K. Kunnath
University of Central Florida
Orlando, FL 32816

May 1995
Building and Fire Research Laboratory
National Institute of Standards and Technology
Gaithersburg, MD 20899

U.S. Department of Commerce
Ronald H. Brown, *Secretary*
Technology Administration
Mary L. Good, *Under Secretary for Technology*
National Institute of Standards and Technology
Arati Prabhakar, *Director*

ABSTRACT

An existing computer code, IDARC, is enhanced to permit the modeling of steel moment-resisting frames (SMRFs) with the potential for weld failures at beam-to-column connections. The steel member model is derived from flexibility formulations in order to allow complex degrading hysteresis behavior to be incorporated. A panel zone element is developed to account for inelastic shear deformations in the beam-to-column connection region. Finally, a new conceptual hysteresis model is developed to represent the force-deformation characteristics at a welded connection, before and after weld failure.

The new models were validated using experimental data from available component tests and an existing computer program, DRAIN-2DX. The results of the study indicate that the enhanced program, referred to as IDASS, is capable of adequately reproducing observed behavior of SMRFs and can be used as an effective tool to investigate the effects of weld failure in steel structures under earthquake loading.

Keywords: computer program; earthquakes flexibility formulation; hysteresis, modeling; steel frames, weld fracture

TABLE OF CONTENTS

Section	Title	Page
1	INTRODUCTION	1
2	MODELING ENHANCEMENTS	3
	2.1 Flexibility-Based Member Model for Steel Sections	3
	2.2 Joint Panel Model	7
	2.3 Hysteretic Model for Steel Sections	9
3	MODEL VALIDATION STUDIES	13
	3.1 Member Model Validation	13
	3.2 Joint Panel Verification	17
	3.2 Validation of Hysteresis Model	23
4	CONCLUDING REMARKS	27
	REFERENCES	29
	APPENDICES	
	A Program User Guide	
	B Sample Data Sets	

1 INTRODUCTION

The ability of welded connections in steel moment-resisting frames (SMRFs) to dissipate energy in the post-yield range has come into question following the failure of thousands of these connections in the recent Northridge earthquake. Additionally, the fact that the beams or panel zones in the region of the weld failures experienced no inelastic behavior is indicative of a serious problem that merits further investigation.

The existence of innumerable SMRFs with identical connections in earthquake-prone regions highlights the urgent need for a systematic evaluation of typical steel frame buildings in which the welded connection is modeled as accurately as possible. A reliable estimate of the margin of safety against failure of the structure is impossible if the connection behavior is not modeled adequately.

Existing computer programs cannot readily model the behavior of welded connections, particularly the effect of sudden weld failures at beam-column connections on overall frame response. The purpose of this research effort is to develop suitable element and material models that permit the analysis of SMRFs, before and after the failure of welded connections, under earthquake loading. Member models will be developed from concepts of distributed flexibility rather than existing procedures using concentrated plasticity. The modeling will also include consideration of the joint panel region that may experience inelastic behavior and contribute significantly to the overall interstory deformation of the building.

2 MODELING ENHANCEMENTS

The IDARC (Kunnath et al., 1992) computational platform was used to carry out the following modeling tasks to enable detailed inelastic analysis of SMRFs with or without welded connections.

1. Develop a new member model for steel elements using flexibility formulations with ability to include finite plastic hinge length at yielding sections.
2. Develop a panel model to account for elastic and potential inelastic deformations of the beam-column joint region.
3. Develop a new hysteretic model for steel sections in which the potential effects of weld failure is incorporated.

Details of the aforementioned developments are detailed in the the following sections.

2.1 Flexibility-Based Member Model for Steel Sections

Existing formulations for nonlinear analysis of steel frame structures is based on the two-component model introduced by Clough et al. (1965) in which the member is subdivided into two fictitious parallel elements, one elastic-perfectly-plastic and the other elastic. The first accounts for yielding while the second introduces strain hardening. The member stiffness matrix in this case is simply the sum of the stiffness of the two components. The computer program DRAIN-2D uses this approach, and has been selected as the companion program in this study for comparing the results of the analysis using the flexibility-based member model.

The idea of a discrete hinge length to model the spread of plasticity was first proposed by Soleimani et al. (1979). Here, a finite length representing the plastified zone is allowed to spread into the member from the ends of the element, while the interior segment remains elastic. A similar model was later used by Meyer et al. (1983). More recently, a girder "superelement" consisting of Soliemani's spread plastic element in which the length of the plastic zone is varied as

a function of load history, a joint subelement to account for fixed-end rotations at the beam-column interface, and an elastic sub-element to characterize the element behavior prior to yielding, was developed by Filippou and Issa (1988).

Figure 2-1 shows a typical member model that forms the basis of developing the element flexibility matrix. The segment AB refers to the clear span of the member so that the lengths A'A and B'B are rigid end zones corresponding to the beam-to-column joint. The joint rotations are distinguished from the local member deformations at the potential plastic hinge zone. While the solution of the structure stiffness matrix is established at the degrees-of-freedom corresponding to the center of the joint, the inelastic behavior of each member is a function of the local rotation within the clear spans. In Figure 2-1, a member in double curvature is shown. It should also be pointed out that the element formulation is not influenced by the incorporation of inelastic joint panel deformations since the member model is derived for the clear span length. The introduction of joint shear deformations results in an additional degree-of-freedom to distinguish beam and column rotations, as described later.

The incremental moment-rotation relationship is established from the integration of the *(M/EI)* diagram. The flexibility matrix is expressed in the following incremental form:

$$\begin{Bmatrix} \Delta\theta_A \\ \Delta\theta_B \end{Bmatrix} = \mathrm{L_n} \begin{bmatrix} f_{11} & f_{12} \\ f_{21} & f_{22} \end{bmatrix} \begin{Bmatrix} \Delta M_A \\ \Delta M_B \end{Bmatrix} \tag{2-1}$$

where $\Delta\theta_A$ and $\Delta\theta_B$ are the incremental rotations corresponding to the moment increments ΔM_A and ΔM_B , f_{ij} are the flexibility coefficients, and $\mathrm{L_n}$ is the clear length of the member. Note that the shear deformations can also be directly incorporated into the above formulation.

Two variations of flexibility are used in the present model, as shown in Figure 2-2. The first model considers a linear variation of flexibility. The flexibility coefficients for this case are as follows:

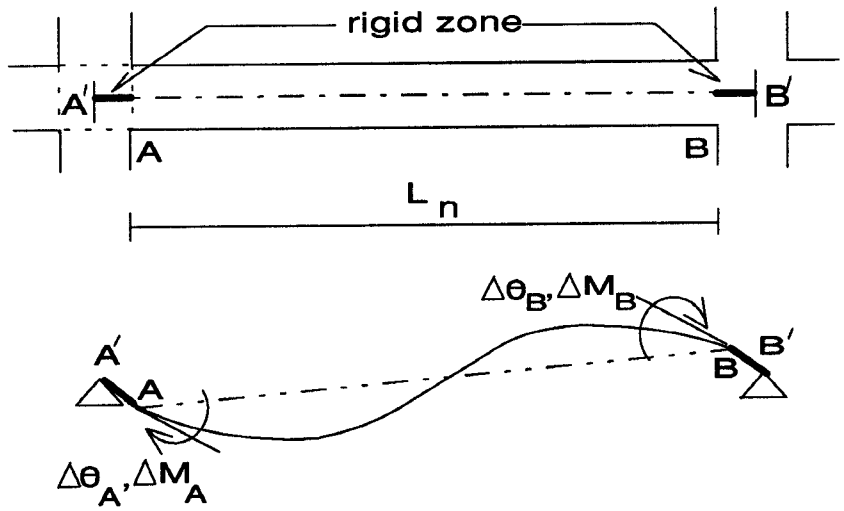

Figure 2-1. Member Model with Rigid End Zones

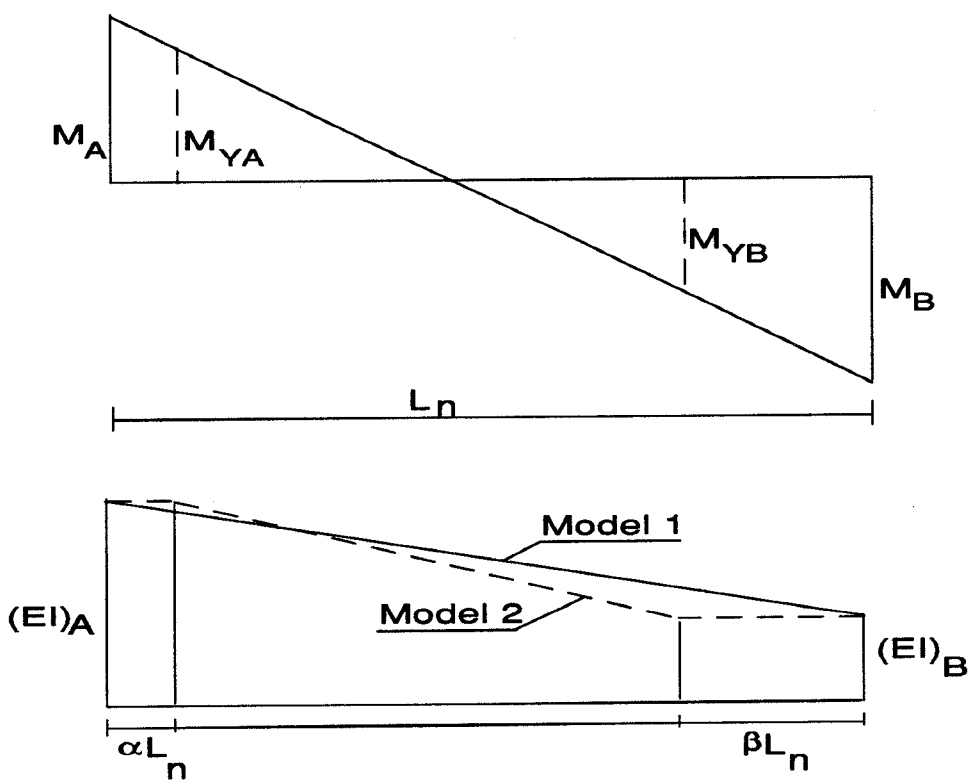

Figure 2-2. Distributed Flexibility Model with and without Spread of Plasticity

$$f_{11} = 1/4(EI)a + 1/12(EI)b \tag{2-2a}$$

$$f_{12} = f_{21} = -1/12(EI)a - 1/12(EI)b \tag{2-2b}$$

$$f_{11} = 1/12(EI)a + 1/4(EI)b \tag{2-2c}$$

The second model includes the spread of plasticity across a finite hinge length. The flexibility distribution in this case assumes the form shown as Model 2 in Figure 2-2. The following flexibility coefficients are obtained:

$$\begin{aligned} f_{11} = {} & (3+3\alpha-3\alpha^2+\alpha^3-\beta-\beta^2-\beta^3+2\alpha\beta-\alpha^2\beta+\alpha\beta^2)/12(EI)_a \\ & +(1-3\alpha+3\alpha^2-\alpha^3+\beta+\beta^2+\beta^3-2\alpha\beta+\alpha^2\beta-\alpha\beta^2)/12(EI)_b \end{aligned} \tag{2-3a}$$

$$\begin{aligned} f_{12} = f_{21} = {} & (1+\alpha+\alpha^2-\alpha^3-\beta-\beta^2+\beta^3+\alpha^2\beta-\alpha\beta^2)/12(EI)_a \\ & +(1-\alpha-\alpha^2+\alpha^3+\beta+\beta^2-\beta^3+\alpha\beta^2-\alpha^2\beta)/12(EI)_b \end{aligned} \tag{2-3b}$$

$$\begin{aligned} f_{22} = {} & (1+\alpha+\alpha^2+\alpha^3-3\beta+3\beta^2-\beta^3-2\alpha\beta-\alpha^2\beta+\alpha\beta^2)/12(EI)_a \\ & +(3-\alpha-\alpha^2-\alpha^3+3\beta-3\beta^2+\beta^3+2\alpha\beta+\alpha^2\beta-\alpha\beta^2)/12(EI)_b \end{aligned} \tag{2-3c}$$

In the present formulation, the finite hinge length can be specified in two ways: either as a fixed quantity expressed as a percentage of the member length or allowed to vary as a function of the end moments. In the latter case, the hinge lengths are set to zero during the initial elastic phase. Yielding at either end of the member results in a new stiffness matrix, which is then constantly updated as the hinge length increases. The hinge length is a function of the previous maximum moment and does not change until the "plastic zone" is exceeded by additional inelastic excursions. The flexibility matrix for a member needs to be updated for one or both of the following reasons: (a) a transition in stiffness as prescribed by the hysteretic force-deformation model; and (b) a change in the plastic hinge length.

2.2 Joint Panel Model

The intersection of large cross-sections in the joint region of SMRFs results in a sizable panel zone that can deform in shear and contribute significantly to the overall joint rotations. Moreover, the shear stresses in the joint may exceed its yield limit leading to hysteretic energy being dissipated by the panel. The effect of such inelastic action in the panel zone may alter the dynamic response of the overall structural system.

Existing procedures in frame analysis assumes either (a) the panel is rigid, in which case the angle between adjacent members (beams and columns) remains fixed even after the panel zone has undergone severe shear deformation, or (b) a linear, elastic relationship exists between the shearing forces and panel-zone distortions. In the former case, a single moment and associated joint rotation is used at the center of the panel. The latter approach recognizes the significance of joint deformations but is incapable of accounting for large inelastic rotations that may occur if the yield shear stress of the joint is exceeded.

A macroelement model to account for additional shear deformations in the joint region is developed. The joint region is idealized as a panel zone characterized by pure shear deformations. The formulation assumes that the columns above and below the panel, and the beams to the left and right of the panel, are connected by rigid links which are capable of independent rotations. The resulting formulation adds an extra degree-of-freedom at each node. The inelastic shear-deformation characteristics of the joint panel are prescribed by a bilinear hysteretic model based on experimentally observed behavior.

Figure 2-3 shows a typical beam-column joint region with the panel zone. With reference to the figure, M_b, θ_b, M_c, θ_c are the moments and rotations of beams and columns, respectively. The shear distortion of the panel, γ_p is the relative change in the rotations of the beam and column element, as follows:

$$\gamma_p = (\theta_b - \theta_c) \tag{2-4}$$

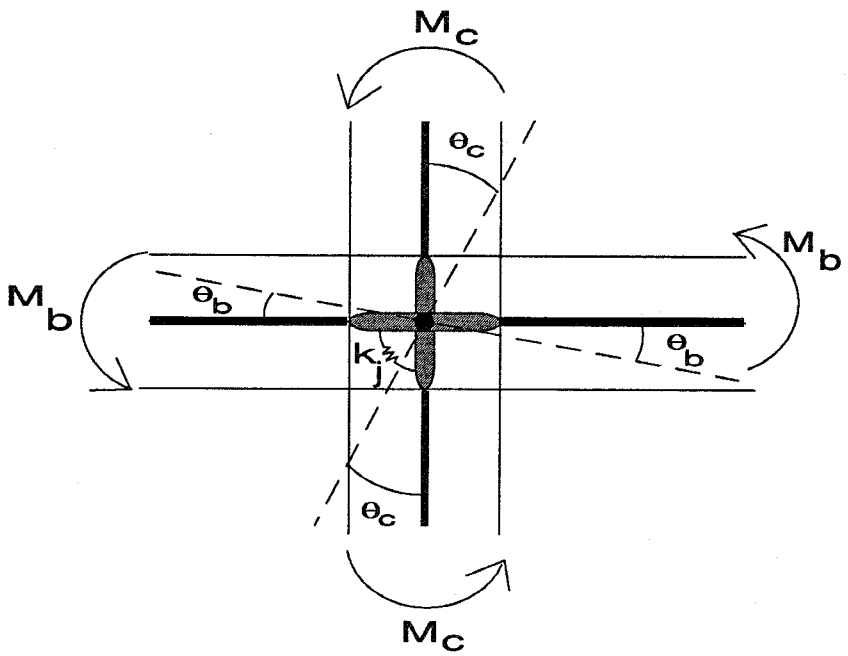

(a) Rigid Links Representing Beam and Column Rotations

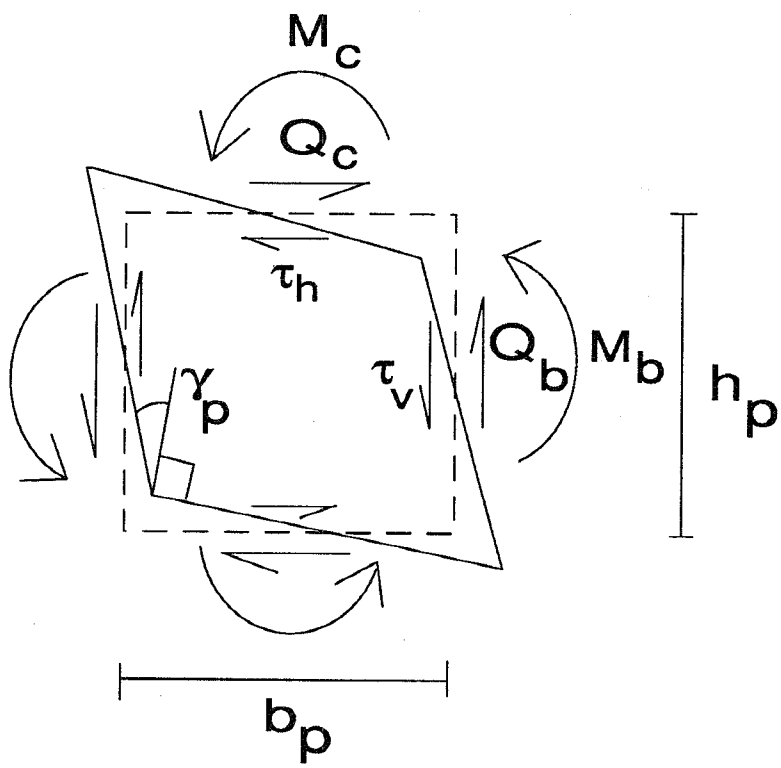

(b) Panel Forces and Stresses

Figure 2-3. Joint Panel Model

A relationship of the following form can be derived:

$$\begin{Bmatrix} M_c \\ M_b \end{Bmatrix} = V_p G \begin{bmatrix} 1 & -1 \\ -1 & 1 \end{bmatrix} \begin{Bmatrix} \theta_c \\ \theta_b \end{Bmatrix} \tag{2-5}$$

where V_p = volume of the panel given by $(h_p b_p t_p)$ where h_p is the panel depth, b_p is the panel width, t_p is the panel thickness, and G = shear modulus of the material. The shear vs. shear strain behavior is specified by means of a bilinear nondegrading envelope, shown in Figure 2-4. The motivation for the loop behavior is derived from observed experimental response of panel zone deformation.

2.3 Hysteretic Model for Steel Sections

Two separate models were developed for steel sections. The first is a simple bilinear model which is commonly used in nonlinear analysis of steel structures. The second model attempts to simulate the failure of a welded connection. A brief description of the two models is provided below.

2.3.1 Nondegrading Bilinear Model

The load-deformation path in this model is prescribed by a primary stiffness: k_1 for the loading and unloading segments, and : k_2 *(+ and -)* for the strain-hardening or post-yield stiffness. The expected load-deformation behavior is shown in Figure 2-4. The yield force values may be different in the positive and negative directions to enable the simulation of nonsymmetric envelopes.

2.3.2 Degrading Model for Potential Weld Failures

A new hysteresis model was developed incorporating the effects of potential weld fracture on the inelastic response of the connection region. Since limited experimental data is available on the response of welded connections following a weld failure, a conceptual model was developed

based on preliminary test data generated at the University of Texas, Austin and the University of California, Berkeley. The features of the proposed model are shown qualitatively in Figure 2-5 and summarized below:

The primary response is characterized by a bilinear envelope with a yield capacity specified by M_y. The moment at the instant of weld failure is denoted by M_{cr}. Presently, this critical moment is specified as a function of the yield moment. When additional data becomes available, it will be possible to replace the parameter β_5 by a more comprehensive parameter which reflects cumulative damage at the connection. At the onset of weld failure, the primary envelope is replaced by a new degraded bilinear representation with reduced stiffness (specified as $\beta_2\ k_1$), reduced capacity ($\beta_1\ M_y$) and modified post-yield slope (specified as a function of the initial post-yield stiffness, $\beta_3\ k_2$) . Unloading from the new envelope results in a degraded stiffness expressed as a function of the new reduced stiffness, $\beta_2\beta_4\ k_1$. Unloading paths aim the initial stiffness path on the negative side, unless the degree of inelasticity causes unloading to reach the post-yield stiffness path directly, as demonstated in the loop behavior (Figure 2-5).

Since weld failures occur primarily in positive bending, it is assumed that the hysteresis loops on the negative side will retain the original stiffness and capacity, as shown in Figure 2-5.

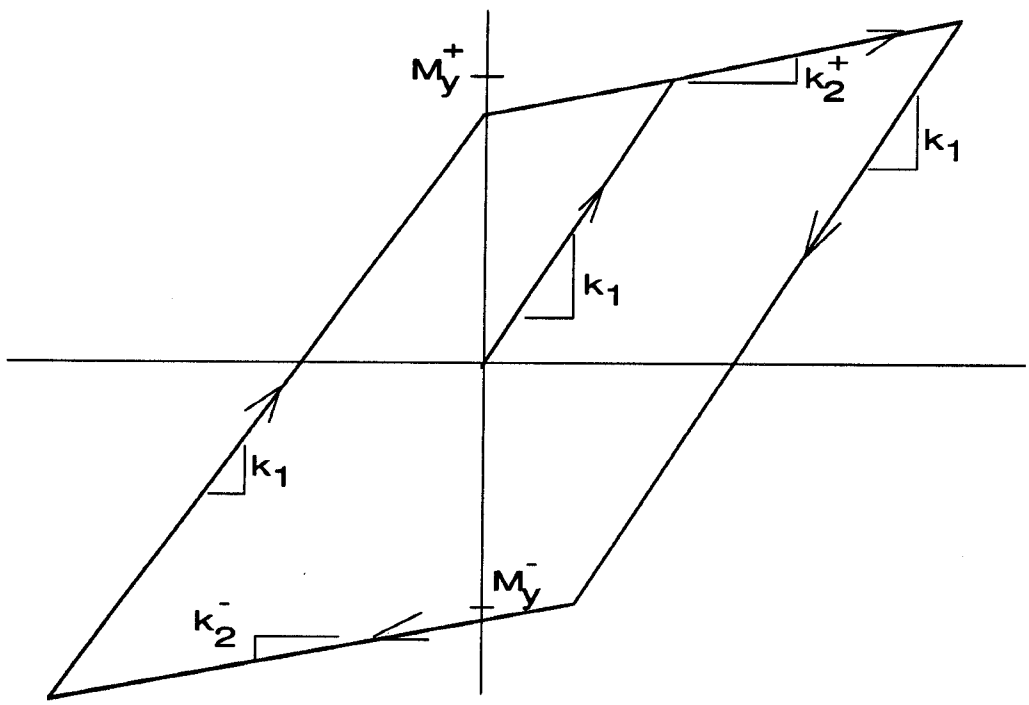

Figure 2-4. Bilinear Hysteretic Model

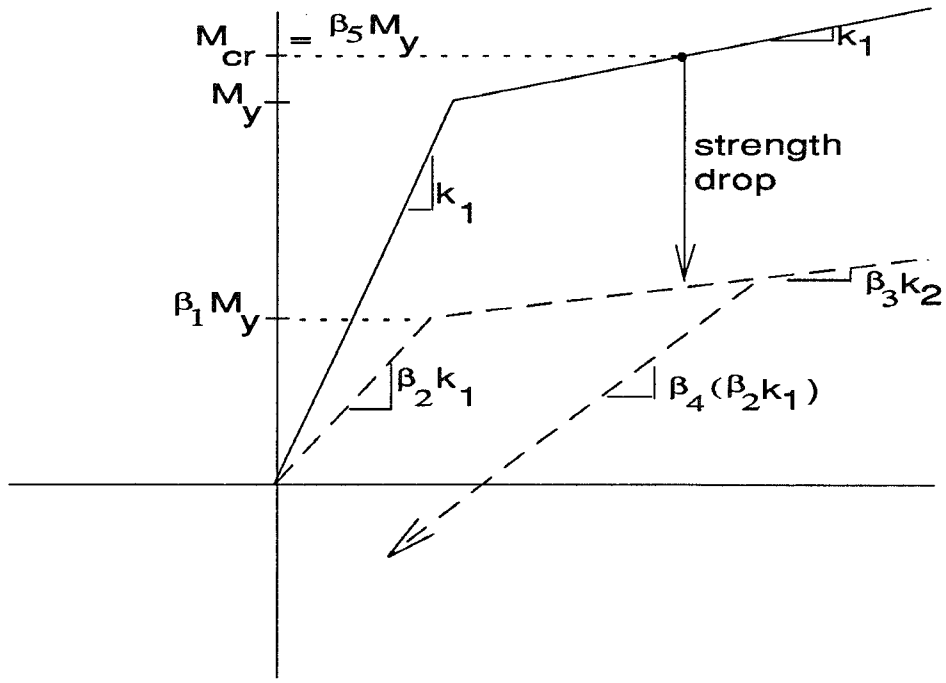

(a) Model Parameters

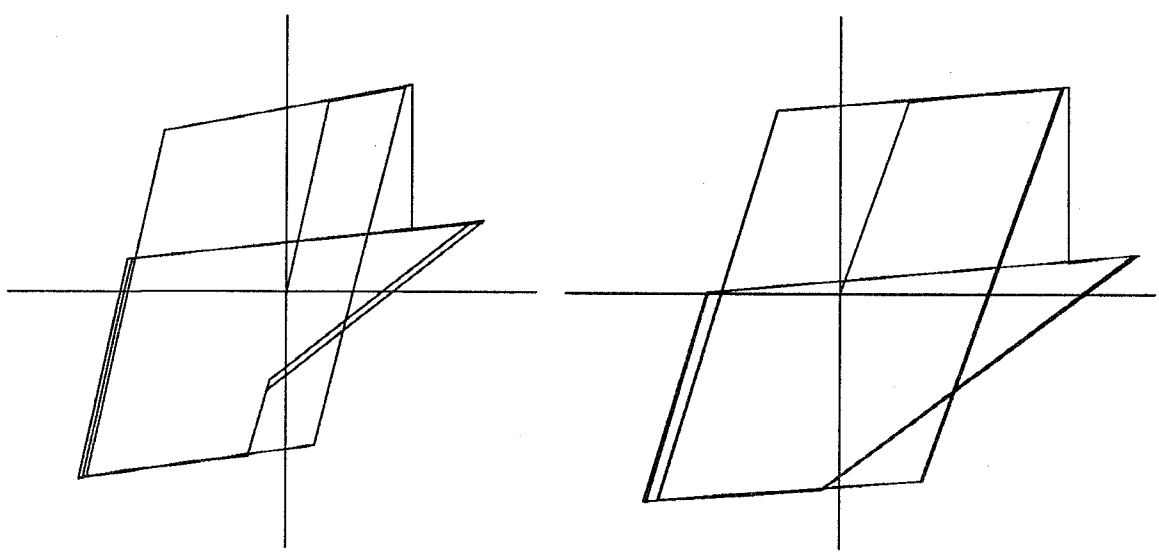

(b) Loop Behavior

Figure 2-5. Hysteresis Model for Connection Region Before and After Weld Fracture

3 MODEL VALIDATION STUDIES

The models developed in the previous section were implemented in an enhanced version of the IDARC computer program. Given the features of this new version, which can model both concrete and steel sections simultaneously, a new acronym is used - IDASS, representing Inelastic Dynamic Analysis of Structural Systems. Program IDASS was validated using experimental results of available component tests and an existing computer program DRAIN-2DX (Prakash et al., 1992). The primary purpose of the comparative studies is to validate the new models, the details of which are described herein.

3.1 Member Model Validation

The new member model developed in Section 2.1, based on distributed flexibility formulations, was compared to the two-component model in DRAIN-2DX which uses a concentrated plasticity approach. The verification was carried out for two loading conditions: (a) static; and (b) dynamic. In both cases, a sample single-bay single-story structure was used in the evaluations, the details of which are shown in Figure 3-1. A post-yield stiffness ratio of 0.05 was used in all simulations. Results of the static analysis are summarized in Table 3-1. The first load case corresponds to an elastic response. The second load case produced yielding in the beam only. The final load of 45 kips produced yielding in the base of the columns in addition to beam yielding. As can be inferred from the Table, the flexibility formulations are identical to those based on concentrated plasticity when the state of the element is similar at both ends, viz. elastic at both ends or yielding at both ends. Model 2 yields slightly higher values than Model 1. The insignificant difference is due to the fact that yielding progresses to only 0.5% across the column dimension. Using a predefined hinge length value of about 10% produced results much closer to that of the concentrated plasticity model, however, no correlation between the distributed flexibility and concentrated plasticity models based on hinge length could be established.

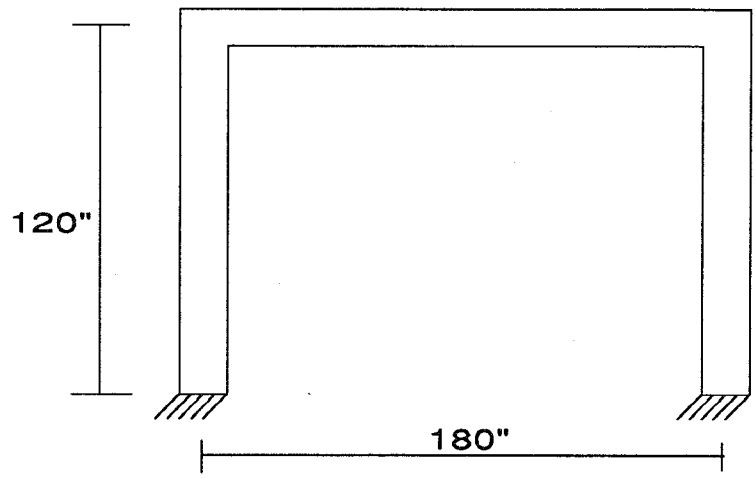

Section Properties

Element	(EA)	(EI)	My
Columns	6E05	7.5E06	1,800
Beam	rigid	5.0E06	650

Figure 3-1. Sample Frame Structure Used in Member Model Validation Studies

Table 3-1. IDASS vs. DRAIN-2DX Comparison for Static Loads

Load Case	Program*	Lateral Load (kips)	Column Moment at Base (k-in)	Beam Moment (k-in)	Lateral Story Displacement (in)
1	DRAIN-2DX		382	218	0.175
	IDASS-1	10	382	218	0.175
	IDASS-2		382	218	0.175
2	DRAIN-2DX		1432	668	0.7025
	IDASS-1	35	1432	668	0.7025
	IDASS-2		1432	668	0.7025
3	DRAIN-2DX		1926	774	2.134
	IDASS-1	45	1928	772	1.934
	IDASS-2		1928	772	1.935

* IDASS - 1 : Model 1, Linear Flexibility Variation
Model 2, Finite Hinge Length Based on End Moment

The second phase of numerical testing involved dynamic analysis of the frame subjected to seismic loads. A floor weight of 200 kips and zero damping were assumed for the dynamic evaluation which resulted in a fundamental period of 0.6 seconds. As in the previous case, three load cases were investigated. The 1940 El Centro acceleration record was used as input. The seismic evaluations were all carried out at a time step of 0.02 seconds which corresponds to the input time step of the acceleration record. The first loading event with a PGA of 0.04g produced an elastic response. The next time history at a PGA of 0.08 g produced yielding in the beam only. The time history responses obtained using IDASS were identical to those obtained using DRAIN-2DX for both cases. Figure 3-2 shows the comparison for the elastic response only. Yielding in both columns and beams was observed at a PGA of 0.12g. The comparative response for this loading is shown in Figure 3-3. There are slight discrepancies in the response using the two programs, however, the difference at maximum amplitude is less than 0.5%.

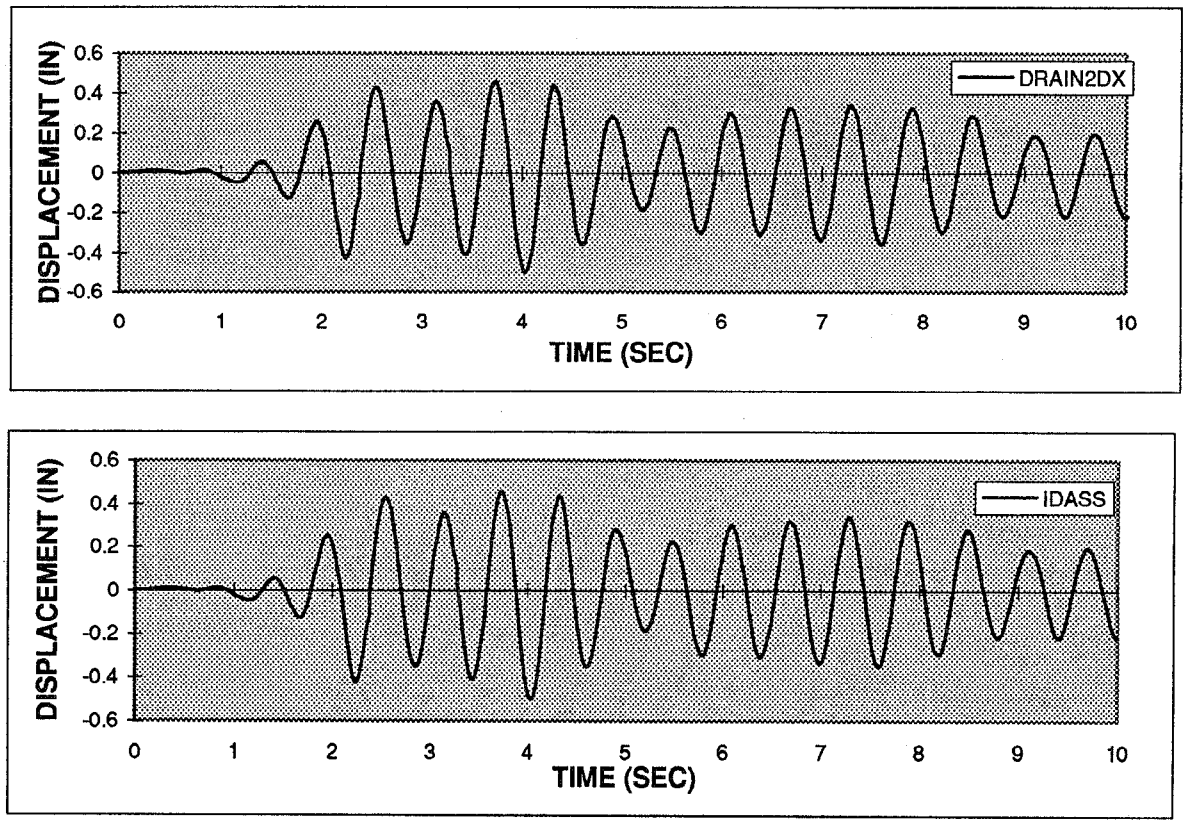

Figure 3-2. Elastic Response Comparison for Seismic Input (El Centro 0.04g)

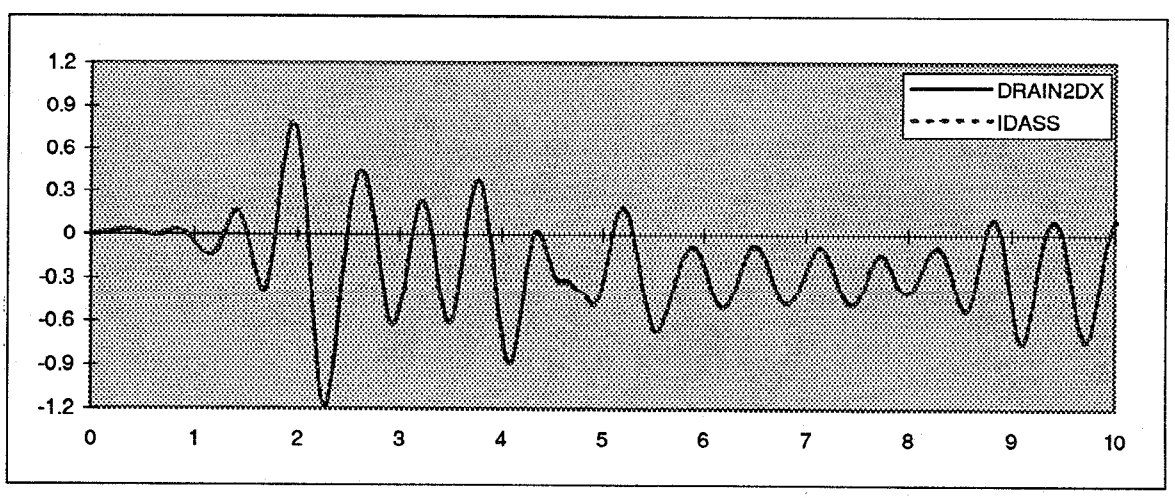

Figure 3-3. Inelastic Response Comparison for Seismic Input (El Centro 0.12g)

3.2 Joint Panel Verification

The joint panel model was verified using two separate sets of available results. The first was based on data reported by Charney and Johnson (undated) who used both simplified analytical expressions and detailed finite element analysis to compute lateral story displacements including the effect of joint panel deformations. In their study, they compared three different modeling approaches: (1) element lengths based on center-line dimensions; (2) element lengths based on clear span dimensions wherein the joint is considered to be a rigid zone; and (3) element lengths based on clear span wherein the joint is modeled as a panel element.

The results reported in Charney and Johnson's paper are based on a beam-column subassemblage that simulates an interior bay in a moment-resisting frame structure. The basic scheme of the beam-column assemblage is shown in Figure 3-4. Equal and opposite loads are applied at the beam ends as shown. Results of the analyses using the panel model presented in Section 2.2 and implemented in IDASS are tabulated in Table 3-2 and compared to the FEM solution reported in Charney and Johnson's paper. Additionally, a commercial computer program STAAD-III was used to verify the center-line and rigid joint models.

This phase of the evaluation was limited to comparing the elastic response of the joint panel region. In modeling the joint panel region in IDASS, the cross-section properties assigned to the panel were based on the depth of the beam, the depth of the column and the thickness of the column web.

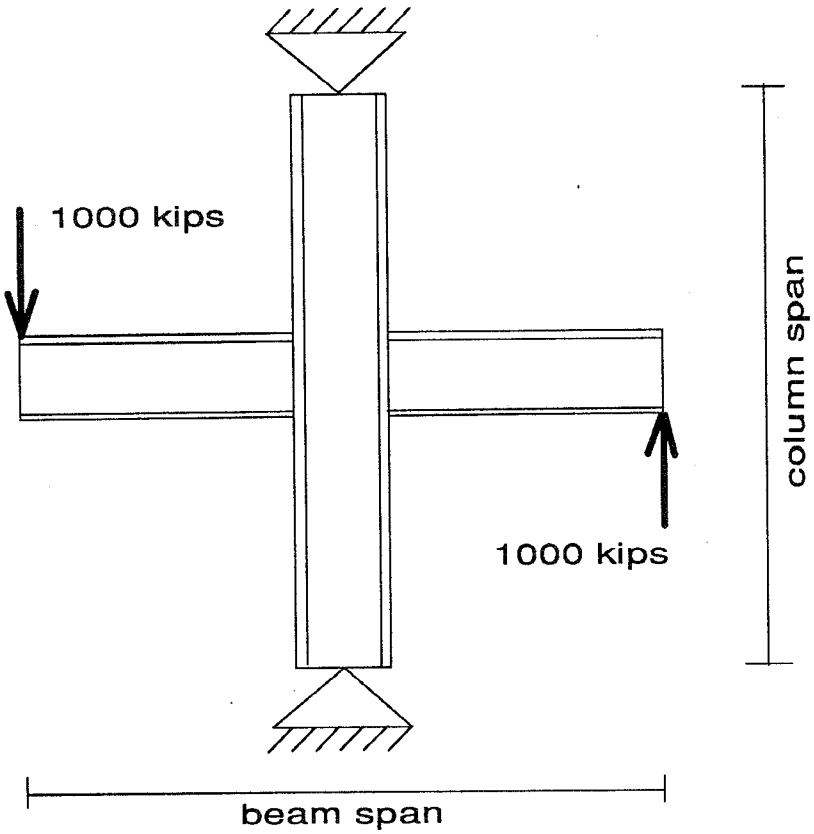

Figure 3-4. Beam-Column Assemblage Used for Panel Model Validation

Table 3-2. Validation of Joint Panel Model - Elastic Interstory Drift Response

SPECIMEN*	Analysis Method+	Modeling Option		
		Center-Line Dimensions	Clear-Span (Rigid Joint)	Clear-Span & Panel Zone Deformations
A. Beam W14X132	FEM Analysis	14.93	11.24	18.58
Column W21X101	STAAD-III	14.80	11.18	18.65
	IDASS	14.80	11.18	-
B. Beam W14X426	FEM Analysis	5.43	3.97	6.22
Column W27X178	STAAD-III	5.40	3.96	6.48
	IDASS	5.40	3.96	-
C. Beam W14X426	FEM Analysis	3.20	2.08	3.20
Column W36X300	STAAD-III	3.12	2.04	3.16
	IDASS	3.12	2.08	-

drift response values in inches

* Specimen A: Column height = 240" ; Beam span = 150"
Specimen B & C: Column height = 360" ; Beam span = 150"
+ FEM results based on data reported in Charney and Johnson

The second phase of verification studies was directed towards computing the inelastic response of the joint panel region. To accomplish this, experimental results from a series of tests conducted at Lehigh University (Sarkisian, 1985) were used. The general layout of a typical specimen is shown in Figure 3-5. W24X62 beam sections and W14X90 column sections were used in the testing. The beam-column assemblage was fixed at the base and generally free to translate and rotate at the top. Loading was applied by means of hydraulic jacks in equal and opposite directions at each end of the beam. Instrumentation of the panel region provided a direct measure of the panel zone deformation.

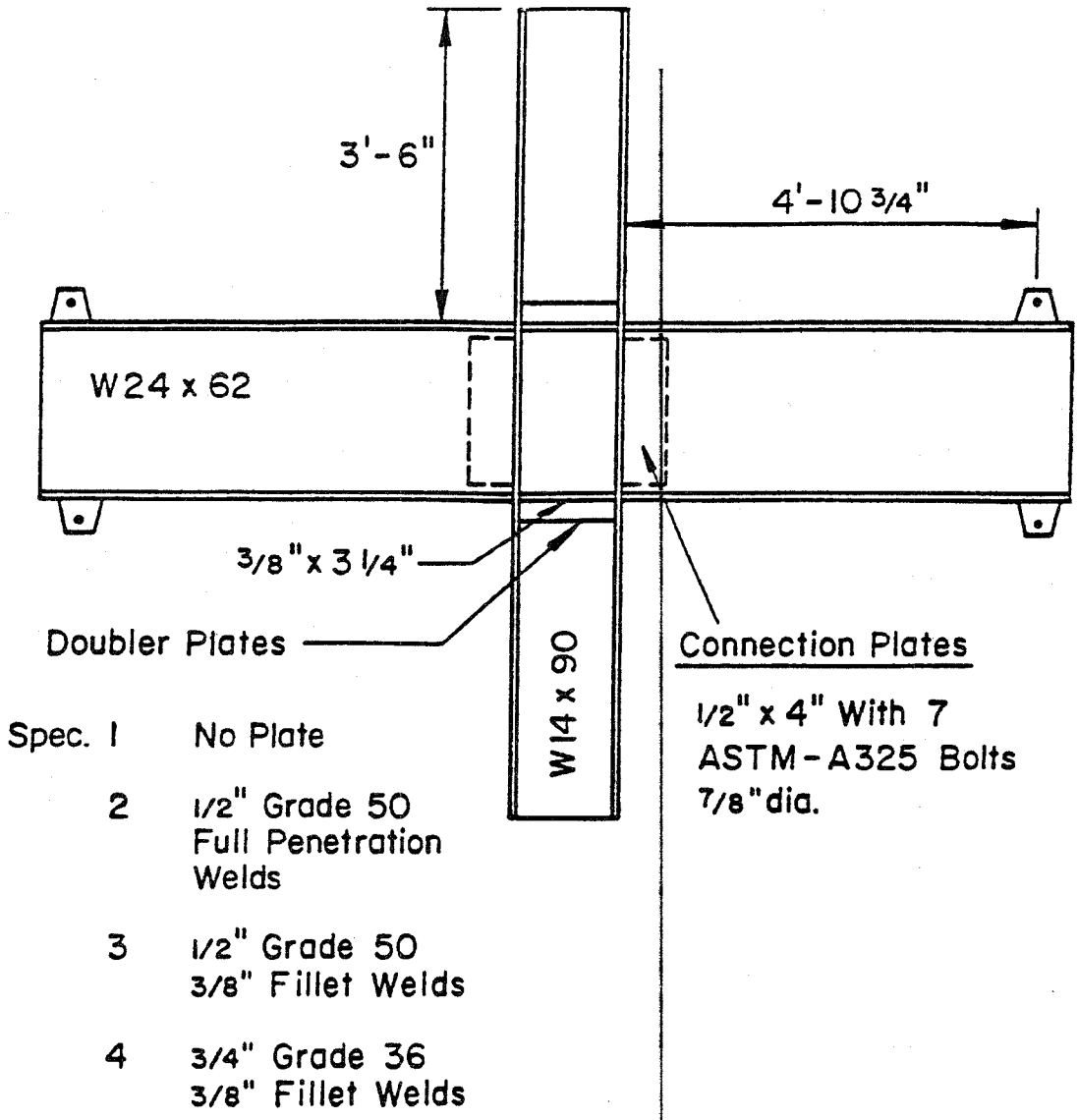

Figure 3-5. Details of Beam-Column Specimen Used for Validating Inelastic Panel Zone Model

The panel model implemented in program IDASS provides a measure of the change in angle (from the original right angle) which can be transformed into panel zone deformation using the following relationship:

$$\gamma = \frac{l' - l}{l} \tag{3-1}$$

where:

$$l = \sqrt{d_c^{\,2} + d_b^{\,2}} \quad ; \quad l = \sqrt{d_c^{\,2} + d_b^{\,2} - 2\, d_c d_b \cos\theta} \tag{3-2}$$

d_c and d_b are the depths of the column and beam, respectively and θ is the change in angle between the column and beam rotations at the joint.

Results of the simulation for two complete cycles are shown in Figure 3-6. Also shown is the experimentally observed response. Given the limitations of the bilinear hysteretic model, the proposed panel model is capable of representing inelastic shear distortions in the joint with acceptable accuracy.

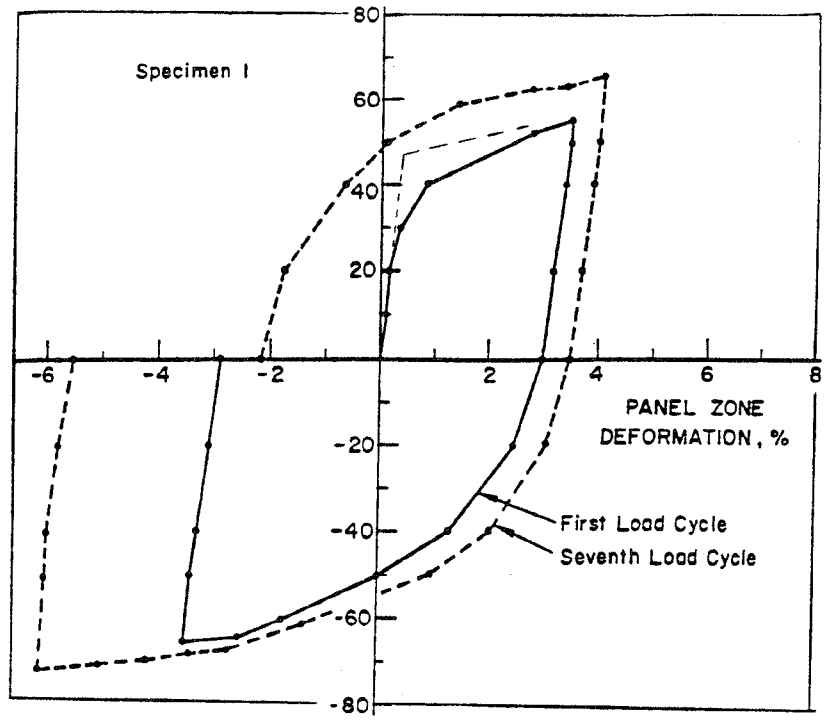

(A) EXPERIMENT

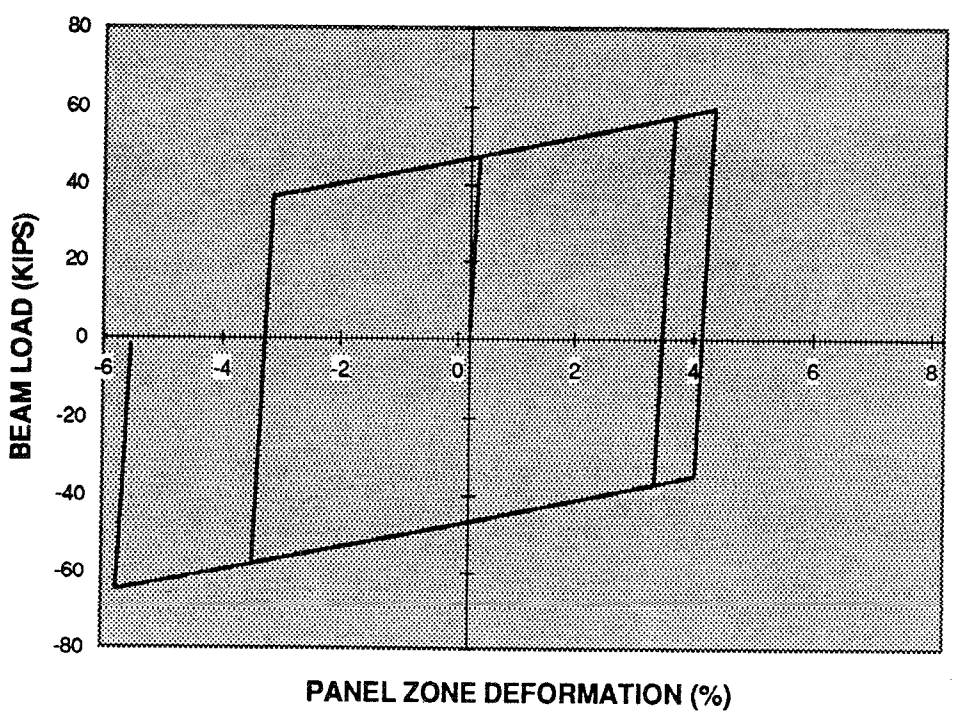

(B) ANALYTICAL SIMULATION

Figure 3-6. Observed vs. Simulated Inelastic Response of Panel Zone

3.3 Validation of Hysteresis Model

The final task in the validation phase of this research effort was the verification of the new hysteresis model for the connection region following a sudden weld failure. Preliminary results from an experimental study recently conducted at the University of California, Berkeley as part of the SAC Joint Venture, were used for this purpose.

The test setup, specimen details and the computer model used in IDASS for the nonlinear evaluation are all shown in Figure 3-7. Three full-scale tests were conducted on a typical beam-column connection built according to industry standards prior to the Northridge earthquake. Of these, one specimen that was subjected to one full cycle following weld failure was selected for the purpose of validating the hysteretis model presented in Section 2-3. Results of the analysis are plotted along with the observed experimental response in Figure 3-8.

It is seen that the proposed model is capable of reproducing experimentally observed behavior of the welded connection region before and after weld failure. In the present analysis, the failure of the weld was specified based on observed experimental data. In an actual analysis of a steel frame structure, it must be possible to specify this critical failure point based on separate analysis or the use of a cumulative damage model.

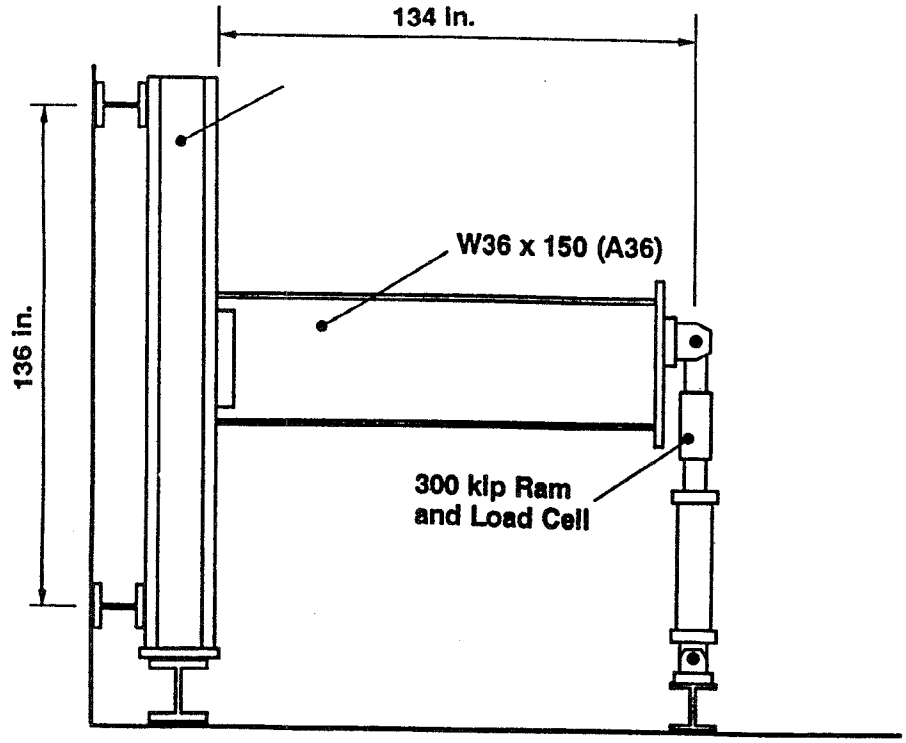

(A) TEST SETUP

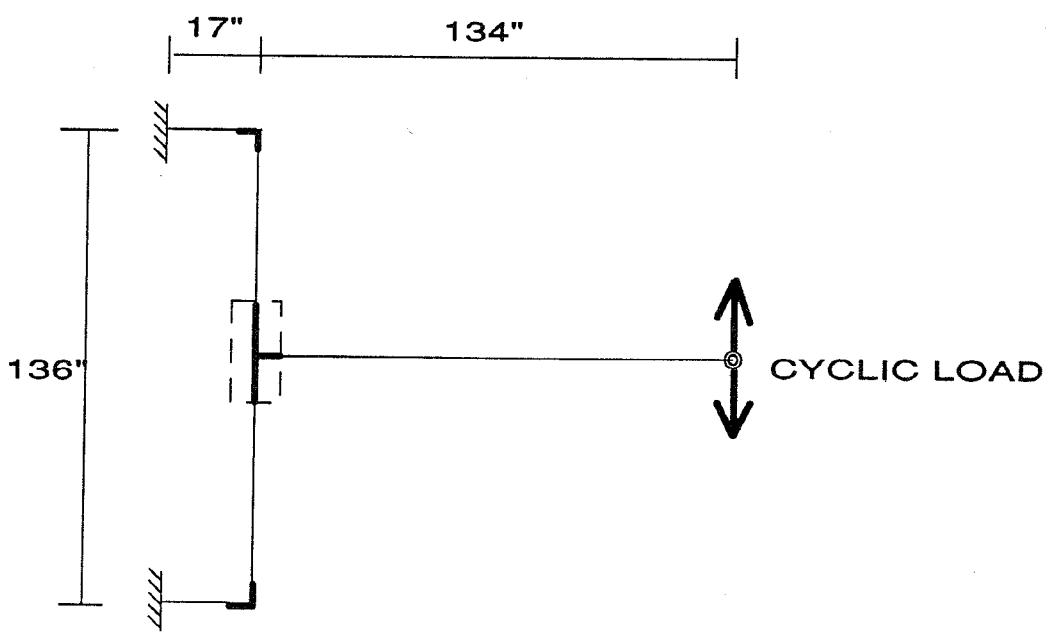

(B) IDASS MODEL

Figure 3-7. Details of Specimen Used For Hysteretic Model Verification

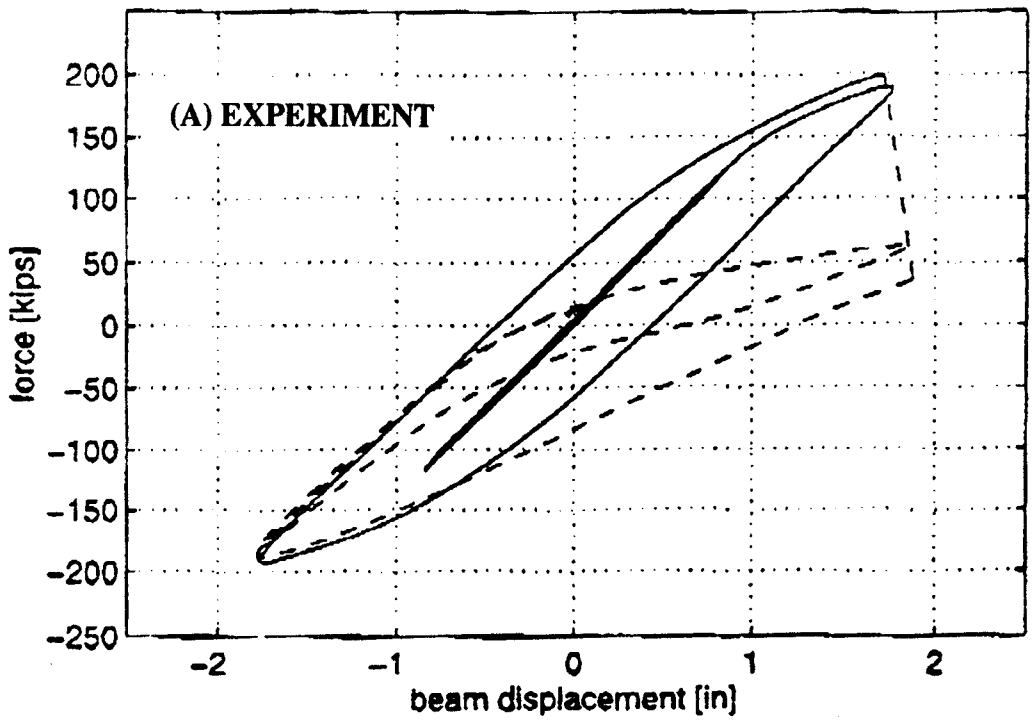

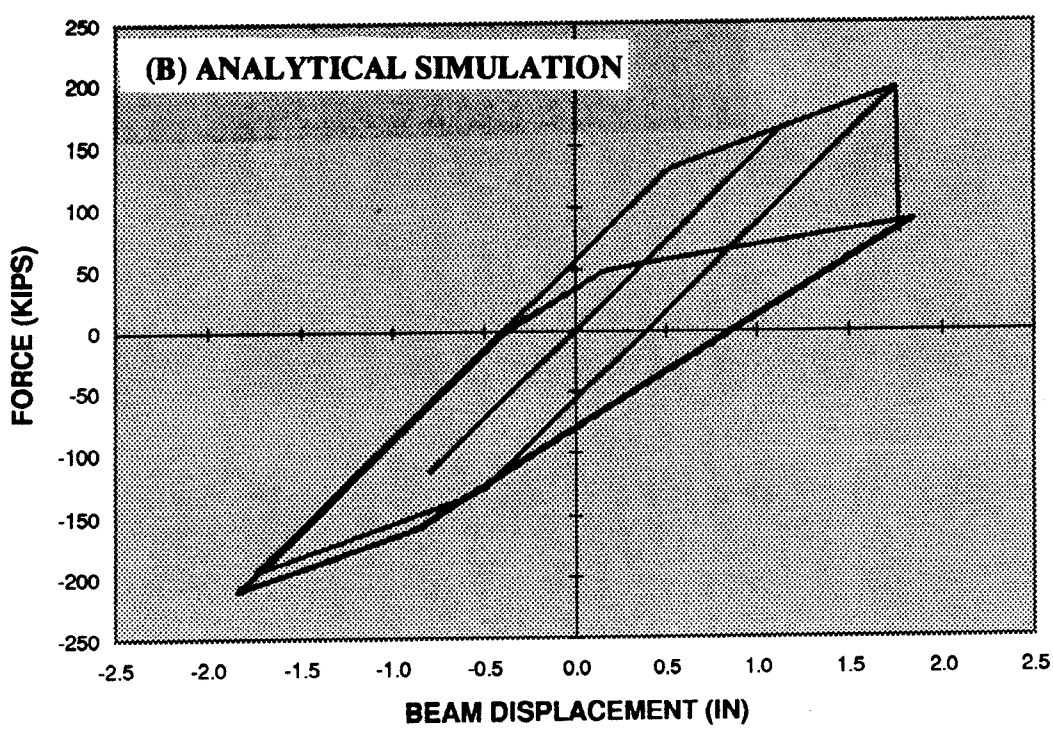

Figure 3-8. Comparison of Observed and Simulated Hysteretic Response of Connection Region Before and After Weld Fracture

4 CONCLUDING REMARKS

Three primary tasks were undertaken in this project with the aim of developing suitable modeling schemes that could be used to analyse the nonlinear dynamic response of SMRFs before and after the failure of welded connections in critical regions.

First, a new member model based on concepts of distributed flexibility was developed. It was shown that the new model reproduces results predicted by concentrated plasticity for the case of both ends of a member having the same state (elastic or yield conditions). For the case that only one end-section of a member yields while the other remains elastic, the flexibility-based model produces values that are less than those predicted by the concentrated plasticity model. Given the fact that concentrated plasticity always over-predicts observed response, it can be concluded that the proposed model may be a better representation of actual inelastic behavior.

A macromodel representation of panel distortion in the joint region of a moment frame was developed. Analytical simulations using the model were compared to results obtained by rigorous finite element analysis and to observed experimental behavior. It is established that the proposed formulation predicts with acceptable accuracy the inelastic behavior of the panel region.

Finally, a new hysteresis model was developed to simulate the condition of a sudden weld failure. The model was derived conceptually from observed experimental response of such connections before and after weld failure. Parameters currently assigned to the model can be enhanced in future as more data becomes available. The model was validated using available experimental data from a series of tests conducted at the University of California, Berkeley.

All models described and validated in this report have been incorporated in program IDASS. The User Manual for the program and the data sets used to reproduce the results presented in this report are included in the Appendices.

REFERENCES

Charney, F.A. and Johnson, R. (undated). "The Effect of Joint Deformations on the Drift of Steel Frame Structures." KKBNA Inc. Consulting Enginneers, Colorado.

Clough, R.W., Benuska, K.L. and Wilson, E.L. (1965). "Inelastic Earthquake Response of Tall Buildings", Proceedings of the 3rd World Conference on Earthquake Engineering, New Zealand, Vol.II, pp. 68-89.

Filippou, F.C. and Issa, A. (1988). "Nonlinear Analysis of Reinforced Concrete Frames Under Cyclic Load Reversals", Report No. UCB/EERC/88/12, University of California, Berkeley.

Giberson, M.F. (1969). "Two Nonlinear Beams with Definitions of Ductility", Journal of the Structural Division, ASCE, Vol.95, ST2, pp.137-157.

Kunnath, S.K., Reinhorn, A.M. and Lobo, R.F. (1992). "IDARC - Version 3.0: A Program for Inelastic Damage Analysis of RC Structures", Technical Report NCEER-92-0022, National Center for Earthquake Engineering, Buffalo, New York.

Meyer, C., Roufaiel, M.S. and Arzoumanidis, S.G. (1983). "Analysis of Damaged Concrete Frames for Cyclic Loads." Earthquake Engineering and Structural Dynamics, Vol.11, pp.207-228.

Prakash, V., Powell, G.H. and Filippou, F. (1992). "DRAIN-2DX : Base Program User Guide." SEMM Report 92-29, University of California, Berkeley.

Sarkisian, M.P. (1985). "Beam-to-Column Connections Subjected to Seismic Loads." M.S. Thesis, Lehigh University, Pennsylvania.

Soleimani, D., Popov, E.P. and Bertero, V.V. (1979). "Nonlinear Beam Model for RC Frame Analysis", Proceedings of the 7th ASCE Conference on Electronic Compution, St. Louis, Missouri.

APPENDIX A

PROGRAM USER GUIDE

USER GUIDE

INPUT FORMAT

A free format is used to read all input data. Hence, conventional delimiters (commas, blanks) may be used to separate data items. Standard FORTRAN variable format is used to distinguish integers and floating point numbers. Input data must, therefore, conform to the specified variable type.

NOTE: Provision is made for a line of text between each set of data items. Refer to the sample data files accompanying this Manual. No blank lines are to be input. A zero input will result in program default values, where applicable.

DATA SET A: GENERAL INFORMATION

TITLE OF PROBLEM

- TITLE — Alpha-numeric title, upto 80 characters.

CONTROL DATA (SEE FIGURE A-1)

- USER_TEXT — *Reference information:* upto 80 characters of text

- NSO,NFR,NCON,NSTL,NPDEL

NSO =	Number of stories
NFR =	Number of frames
NCON =	Number of different concrete material properties (= 0 for steel structures)
NSTL =	Number of different steel stress-strain envelopes specified
NPDEL =	0 ; ignore P-Delta effects; = 1 ; include P-Delta effects

NOTES: A structure must be decomposed into a series of parallel frames. Input is required only for non-identical frames, denoted here by the integer variable NFR. The entire group of frames can be defined using an L-I-J nodal locater system. This concept is shown graphically in Figure A-1 for three different examples. In Figure A-1a, the four-story building made up of a total of four frames is assumed to have two pairs of identical frames, hence, only two of them need be input in IDARC (NFR=2). The cantilever beam/column shown in Figure A-1b is defined as a single-story structure with one column line. Likewise, the subassemblage shown in Figure 1c is defined as a 2-story structure with three column lines.

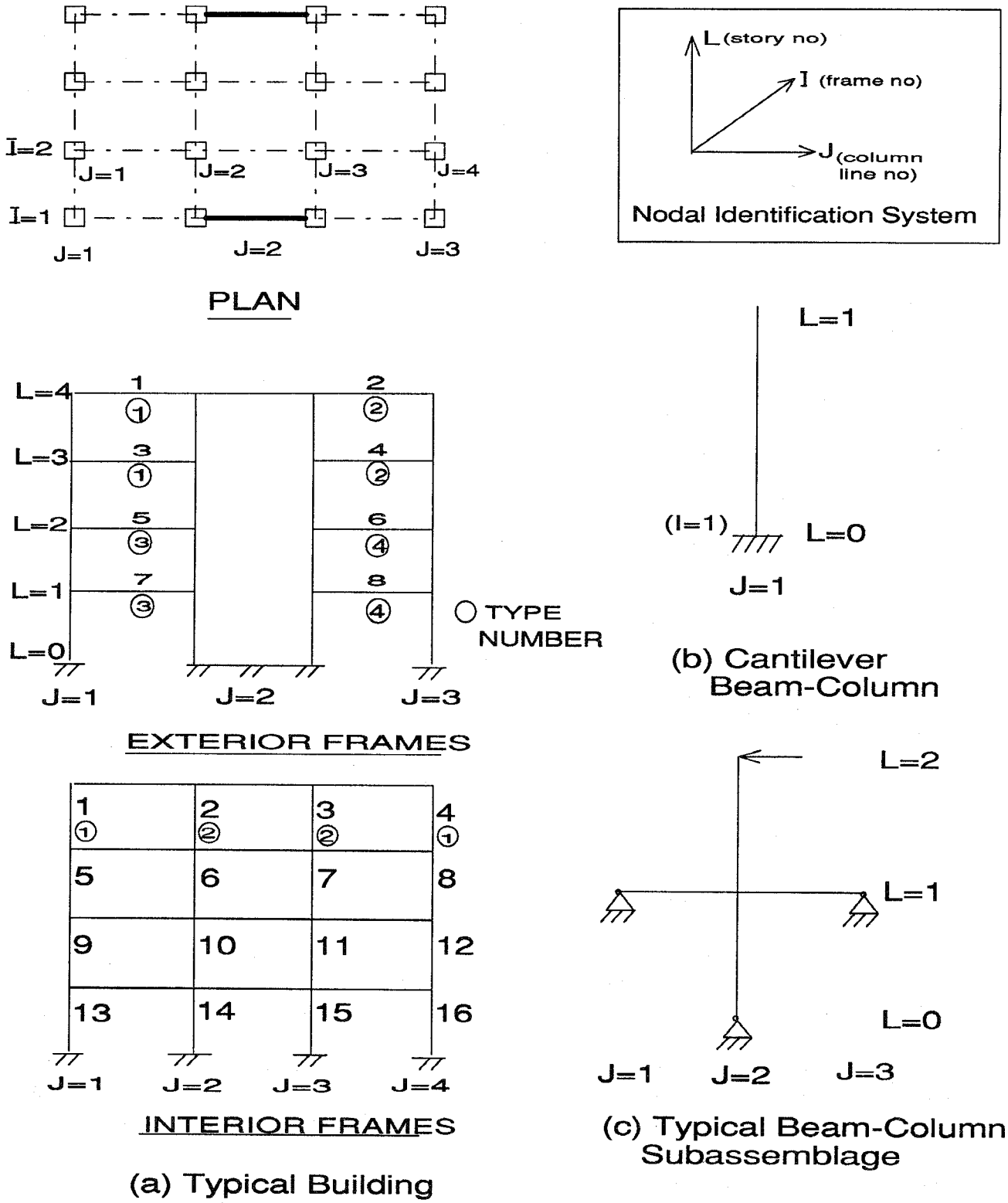

Figure A-1. Frame Discretization and Nodal Identification

ELEMENT TYPES (SEE FIGURE A-1)

• USER_TEXT *Reference information:* upto 80 characters of text

• MCOL,MBEM,MWAL,MEDG, MTRN,MSPR,MJNT

MCOL = No. of types of columns
MBEM = No. of types of beams
MWAL = No. of types of shear walls
MEDG = No. of types of edge columns
MTRN = No. of types of transverse beams
MSPR = No. of types of rotational springs
MJNT = No. of types of joints

NOTES: Elements are grouped into identical sets based on cross-section data and initial conditions such as axial loads. For example, in the interior frame shown in Figure A-1a, assuming identical interior and exterior columns in each floor, only 8 column types are needed to define all 16 elements, i.e., 2 types per each level as shown in the Figure.

ELEMENT DATA

• USER_TEXT *Reference information:* upto 80 characters of text

• NCOL,NBEM,NWAL,NEDG,NTRN,NSPR,NMR, NJNT

NCOL = Total number of columns
NBEM = Total number of beams
NWAL = Total number of shear walls
NEDG = Total number of edge columns
NTRN = Total number of transverse beams
NSPR = Total number of rotational springs
NJNT = Total number of joints
NMR = Total number of moment releases

NOTES: NMR is used to specify moment releases (hinge locations) at member ends. Releasing a moment at a member end results in a hinge condition at that end thereby disallowing moments to develop at the section. Moment releases may not be specified at both ends of a member.

UNIT SYSTEM

• USER_TEXT *Reference information:* upto 80 characters of text

• IU System of units
= 1, inch,kips
= 2, mm, kN

FLOOR ELEVATIONS (SEE FIGURE A-2)

- USER_TEXT — *Reference information:* upto 80 characters of text
- HIGT(1),HIGT(2)...HIGT(NSO) — Elevation of each story from the base, beginning with the first floor level.

DESCRIPTION OF IDENTICAL FRAMES

- USER_TEXT — *Reference information:* upto 80 characters of text
- NDUP(1),NDUP(2)...NDUP(NFR) — Number of duplicate frames for each of the NFR frames

NOTES: In the sample structure shown in Figure A-1, there are four frames. However, the two interior frames are identical as are the exterior frames. In this case, NFR=2, and NDUP(1) = NDUP(2) = 2.

PLAN CONFIGURATION

- USER_TEXT — *Reference information:* upto 80 characters of text
- NVLN(1),NVLN(2)...NVLN(NFR) — Number of column lines (or J-locater points) in each frame.

NOTES: A set of NVLN points for each frame should define completely the column lines necessary to specify every vertical element in that frame. If a beam element is subdivided into two or more segments, then the number of column lines specified must include these internal beam nodes as well.

NODAL WEIGHTS (SEE FIGURE A-2)

- USER_TEXT — *Reference information:* upto 80 characters of text
- LEVEL, IFR(1), WVT(1) ..WVT(NVLN(1))
  IFR(2), WVT(1)...WVT(NVLN(2))
  .....repeat for NFR frames
- (repeat upto NSO levels)

LEVEL = Story level number
IFR(J) = Frame number
WVT(K) = Nodal weight

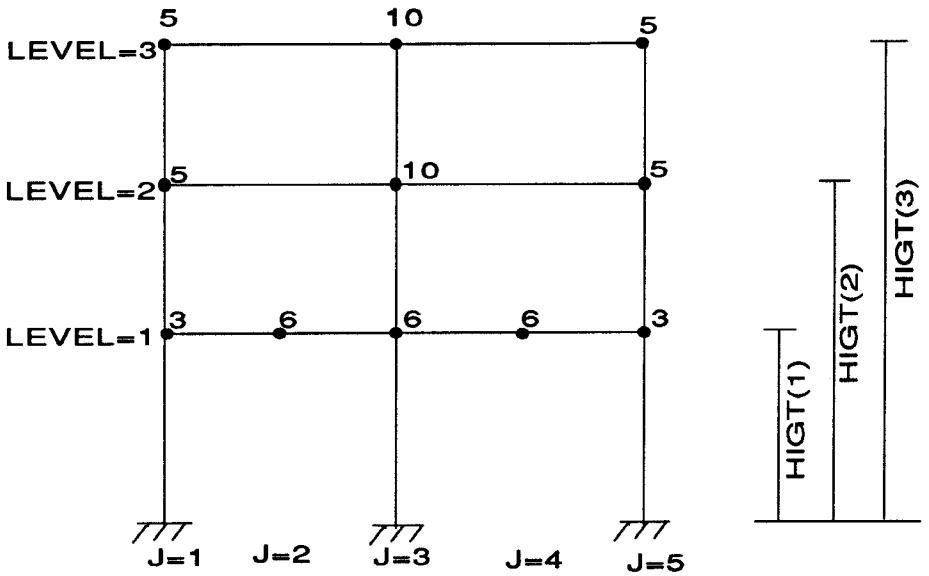

FRAME #1

(numbers shown at nodes = nodal weights)

INPUT DATA:

```
1,  1,  3.0, 6.0,  6.0, 6.0, 3.0
2,  1,  5.0, 0.0, 10.0, 0.0, 5.0
3,  1,  5.0, 0.0, 10.0, 0.0, 5.0
```

Figure A-2. Floor Heights and Nodal Weights

ENVELOPE GENERATION OPTION

- USER_TEXT — *Reference information:* upto 80 characters of text
- IUSER — Code for specification of user properties
  - = 0, requires IDARC generated envelopes for atleast one element
  - = 1, complete moment-curvature envelope data to be provided by user

DATA SET B: CONCRETE PROPERTIES (SEE FIGURE A-3)

SKIP THIS INPUT IF IUSER = 1

- USER_TEXT — *Reference information:* upto 80 characters of text
- IM,FC,EC,EPS0,FT,EPSU,ZF
- *(repeat for each of the NCON concrete types)*

IM = Concrete type number
FC = Unconfined compressive strength
EC = Initial Young's Modulus of concrete
EPS0 = Strain at max. strength of concrete (%)
FT = Stress at tension cracking
EPSU = Ultimate strain in compression (%)
ZF = Parameter defining slope of falling branch

Default Values: $EC = 57\sqrt{f_c'}$ *ksi ;* $EPS0 = 0.2\%$ *;* $FT = 0.12*FC$ *;*
EPSU and ZF are computed from cross-section data.

DATA SET C : STEEL PROPERTIES (SEE FIGURE A-4)

SKIP THIS INPUT IF IUSER = 1

- USER_TEXT — *Reference information:* upto 80 characters of text
- IM,FS,FSU,ES,ESH,EPSH — *Characteristics of steel stress-strain curve:*
- *(repeat for each of the NSTL steel types)*

IM = Steel type number
FS = Yield strength
FSU = Ultimate strength
ES = Modulus of elasticity
ESH = Modulus of strain hardening
EPSH = Strain at start of hardening (%)
Default Values:

*FSU = 1.4 * FS ; ES = 29,000 ksi ; ESH = (ES / 60) ksi ; EPSH = 3.0%*

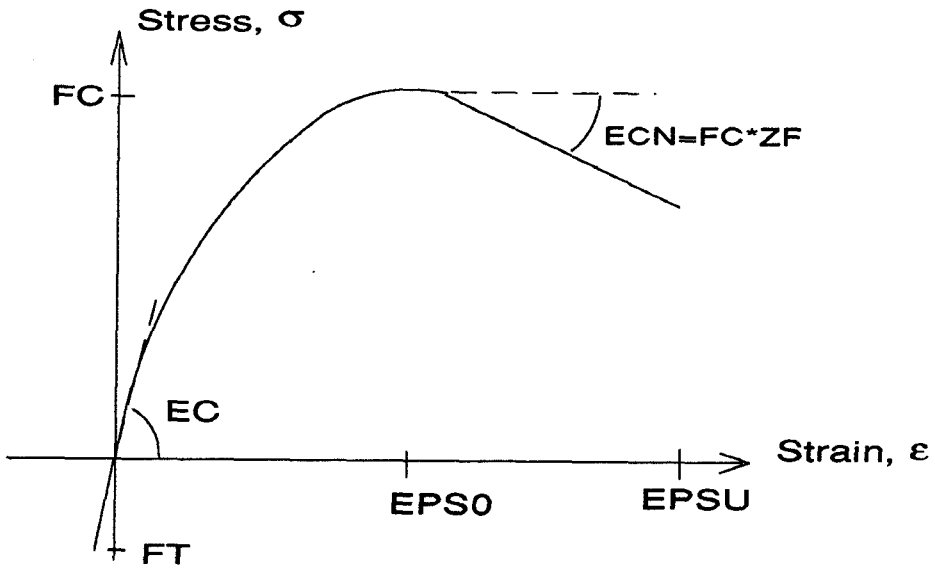

Figure A-3. Stress-Strain Curve for Unconfined Concrete

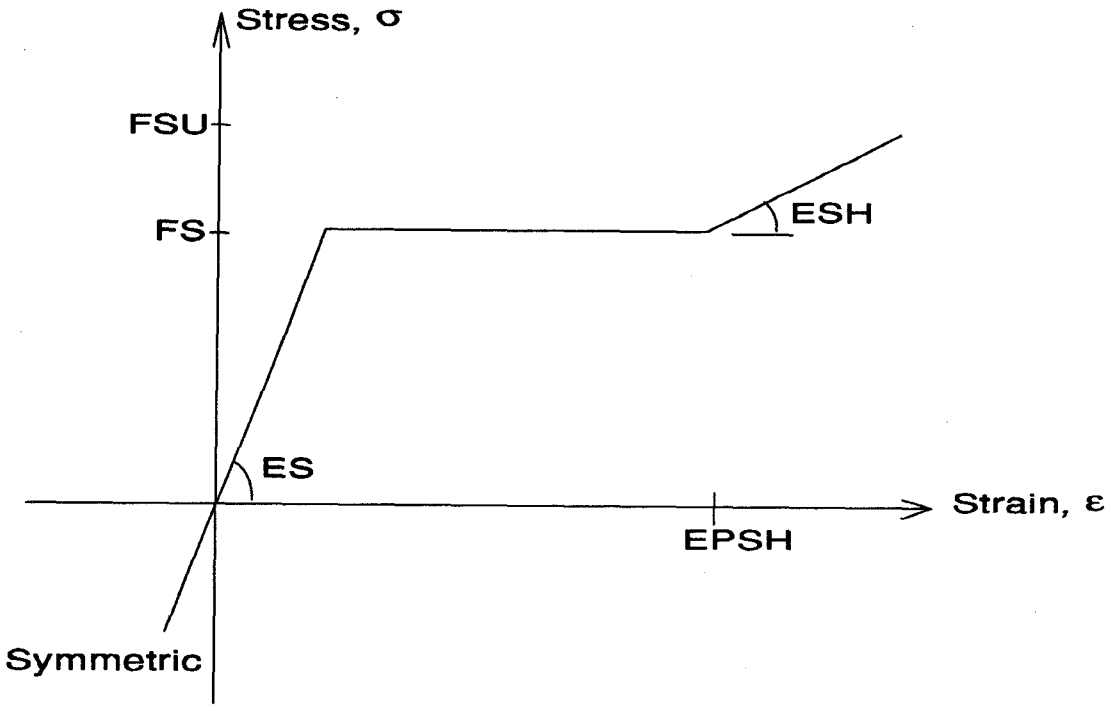

Figure A-4. Stress-Strain Specification for Steel Sections and Reinforcing Bars

DATA SET D: HYSTERESIS MODELING

- USER_TEXT — *Reference information:* upto 80 characters
- NHYS — Number of types of hysteretic rules

HYSTERETIC MODEL PARAMETERS

- IR, IHYSTYP, PARAM1, PARAM2, PARAM3, PARAM4, PARAM5, PARAM6
- *(NHYS lines of data)*

(SEE FIGURES A-5, A-6 AND A-7)

IR = Parameter Set Number
IHYSTYP = 1 , Reinforced Concrete
= 2 , Steel (non-degrading)
= 3 , Steel (degrading)

Input values of hysteretic parameters based on the choice of IHYSTYP as follows:

Parameter	IHYSTYP = 1	IHYSTYP = 2	IHYSTYP = 3
PARAM1	Stiffness degrading coefficient	Post-yield stiffness ratio	Post-Yield Stiffness Ratio, α
PARAM2	Energy-based strength decay parameter	Not used, input 0.0	Strength Reduction Ratio after Weld Failure, β_1
PARAM3	Ductility-based strength decay parameter	Not used, input 0.0	Stiffness Reduction Ratio, β_2
PARAM4	Target slip or crack-closing parameter	Not used, input 0.0	Post-Yield Stiffness Reduction Ration, β_3
PARAM5	Not used, input 0.0	Not used, input 0.0	Degraded Unloading Stiffness Ratio, β_4
PARAM6	Not used, input 0.0	Not used, input 0.0	Critical Force Factor at Onset of Weld Failure, β_5

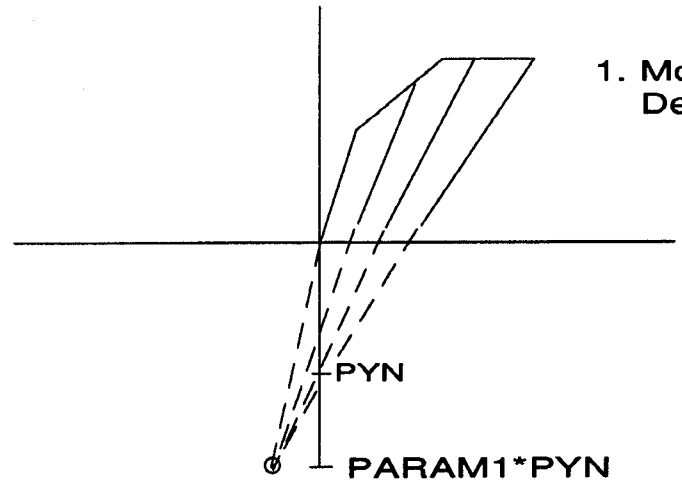

1. Modeling of Stiffness Degradation

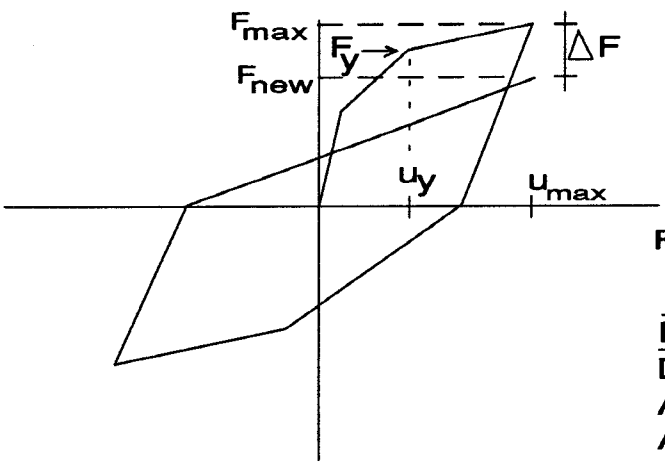

2. Modeling of Strength Deterioration

$$F_{new} = F_{max}\left(1 - \frac{A1*\bar{E} - A2*\bar{D}}{F_y \quad u_{ult}}\right)$$

$\bar{E}$ = Area of F-u loops
$\bar{D}$ = Ductility
A1 = PARAM2
A2 = PARAM3

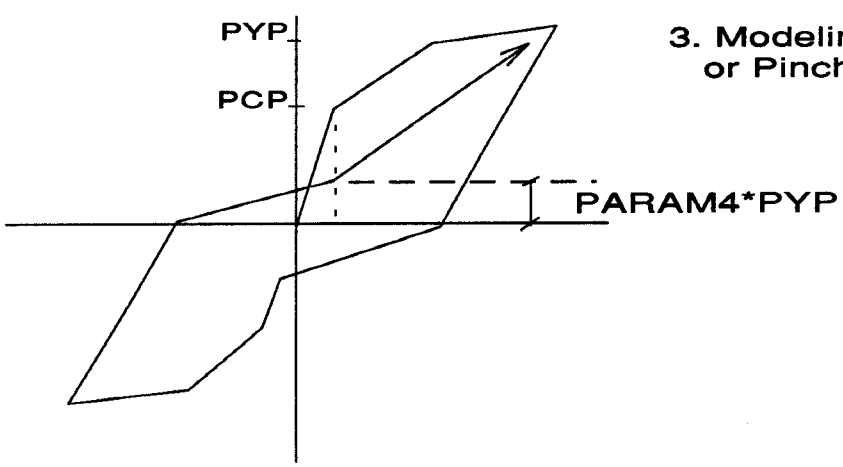

3. Modeling of Slip or Pinching Behavior

Figure A-5. Hysteretic Parameters for RC Sections

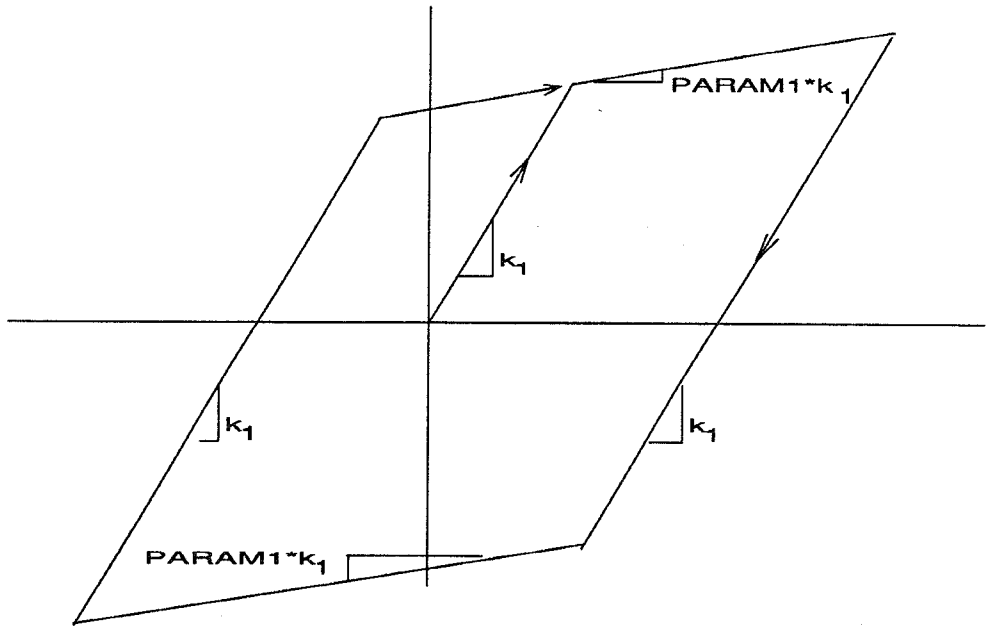

Figure A-6. Bilinear Nondegrading Model

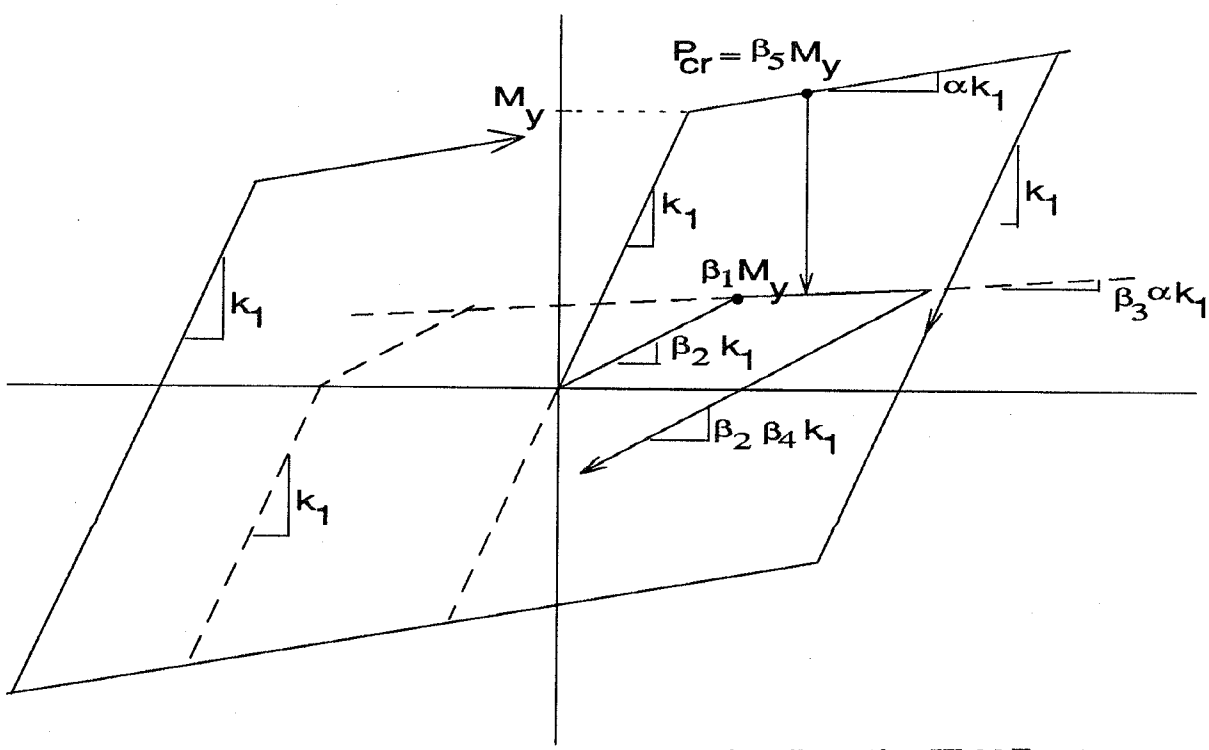

Figure A-7. Hysteresis Model for Steel Connections Including Weld Fracture

DATA SET E: COLUMN PROPERTIES

SKIP THIS INPUT IF THE STRUCTURE HAS NO COLUMNS (NCOL=0)

- USER_TEXT — *Reference information:* upto 80 characters of text
- IUCOL — Type and option for column section input

  = 1; Reinforced Concrete; cross-section data input
  = 2; Reinforced Concrete; moment-curvature input
  = 3; Steel; cross-section data - bare steel (symmetric)
  = 4; Steel; moment-curvature input
  = 5; Composite (steel and concrete) and nonsymmetric section

IF IUCOL = 1, CONTINUE WITH SET E1
IF IUCOL = 2, GO TO SET E2
IF IUCOL = 3, GO TO SET E3
IF IUCOL = 4, GO TO SET E4 (IUCOL=5, unavailable)

DATA SET E1

- USER_TEXT — *Reference information:* upto 80 characters of text

For each column type, input the following:

- ICTYPE — Type of column
  = 1; rectangular (DEFAULT)
  = 2; circular

Rectangular Section Data: (Figure A-8)
General data:
- *KC,IMC,IMS,AN,AMLC,RAMC1,RAMC2*

Bottom section:
- *KHYSC, D, B, DC, AT, HBD, HBS, CEF*

Top section (skip if symmetric, see note below):
- *KHYSC, D, B, DC, AT, HBD, HBS, CEF*

NOTE: If KHYSC for bottom section is input with negative sign, section is assumed to have identical properties for bottom and top section; no input is required for top section

KC = Column type number
IMC = Concrete type number
IMS = Steel type number
AN = Axial load
AMLC = Center-to-center column height
RAMC1 = Rigid zone length at bottom
RAMC2 = Rigid zone length at top

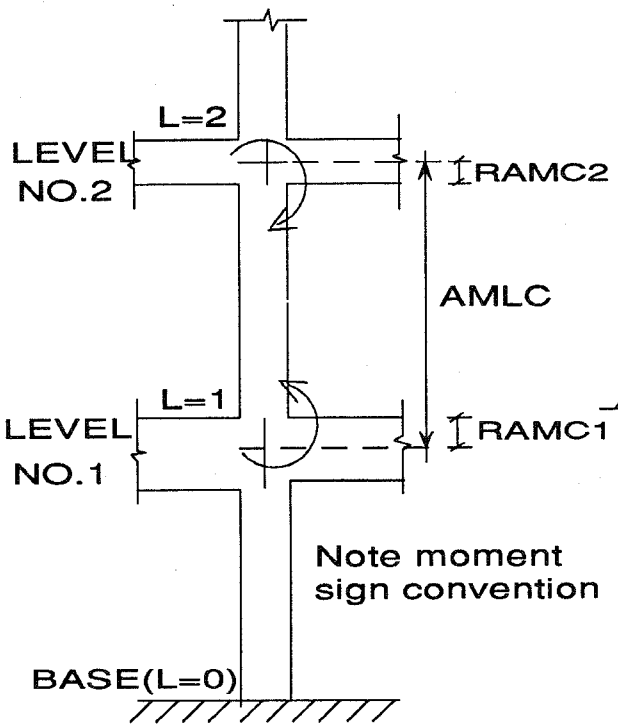

Typical Column Line

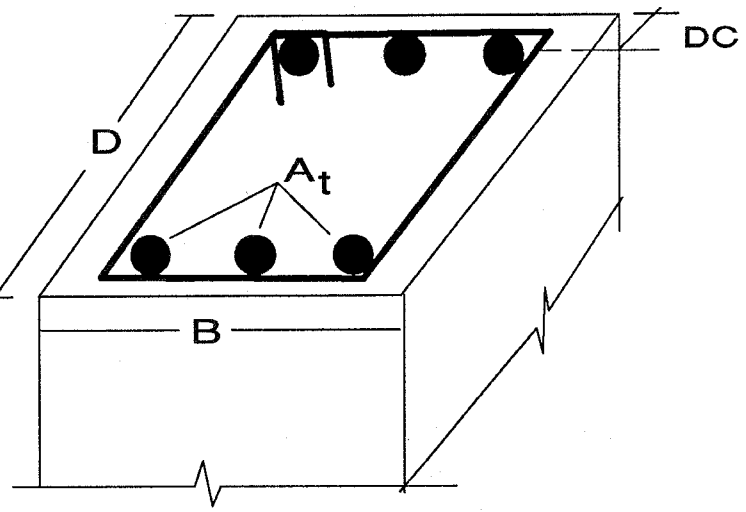

Typical Column Cross-Section

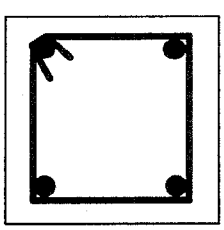

Minimal Confinement
CEFF = 0.5

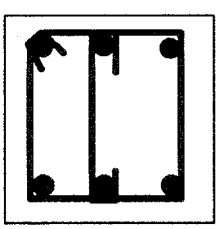

Nominal Confinement
CEFF = 0.66

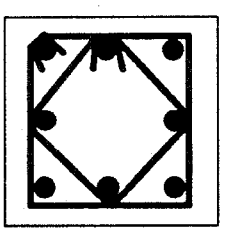

Well Confined
CEFF = 1.0

Effectiveness of Confinement for Some Typical
Hoop Arrangements

Figure A-8. Rectangular Concrete Column Input Details

KHYSC = Hysteretic rule number (may be negative)
D = Depth of column
B = Width of column
D = Distance from centroid of reinforcement to face of column
AT = Area of reinforcement on one face
HBD =Hoop bar diameter
HBS = Hoop bar spacing
CEF = Effectiveness of column confinement

Return to input of ICTYPE. When done, go to SET F

Circular Section Data: (Figure A-9)
General data:
- *KC,IMC,IMS,AN,AMLC,RAMC1,RAMC2*
- KHYSC, AN,DO,CVR,DST,NBAR,BDIA,HBD,HBS

KC = Colum Type number
IMC = Concrete type number
IMS = Steel type number
AMLC = Center-to-center column height
RAMC1 = Rigid arm bottom
RAMC2 = Rigid arm top

KHYSC = Hysteretic Rule number
AN = Axial load on the column
DO = Outer diameter of column
CVR = Cover to center of hoop bar
DST = Distance between centers of long. bars
NBAR = Number of longitudinal bars
BDIA = Diameter of longitudinal bar
HBD = Diameter of hoop bar
HBS = Spacing of hoop bars

Return to input of ICTYPE. When done go to SET F.

SET E2: REINFORCED CONCRETE - MOMENT CURVATURE INPUT (Figure A-10)

- USER_TEXT *Reference information:* upto 80 characters of text

General Data:
- KC, AMLC, RAMC1, RAMC2

Bottom section:
- KHYSC, EI,EA,GA, PCP,PYP,UYP,UUP,EI3P,PCN,PYN,UYN,UUN,EI3N

Top section (skip if symmetric, see note below):
- KHYSC, EI,EA,GA, PCP,PYP,UYP,UUP,EI3P,PCN,PYN,UYN,UUN,EI3N

Note: A negative sign for KHYSC for bottom section indicates similar properties for top section.

- *(repeat for each of MCOL sections)*

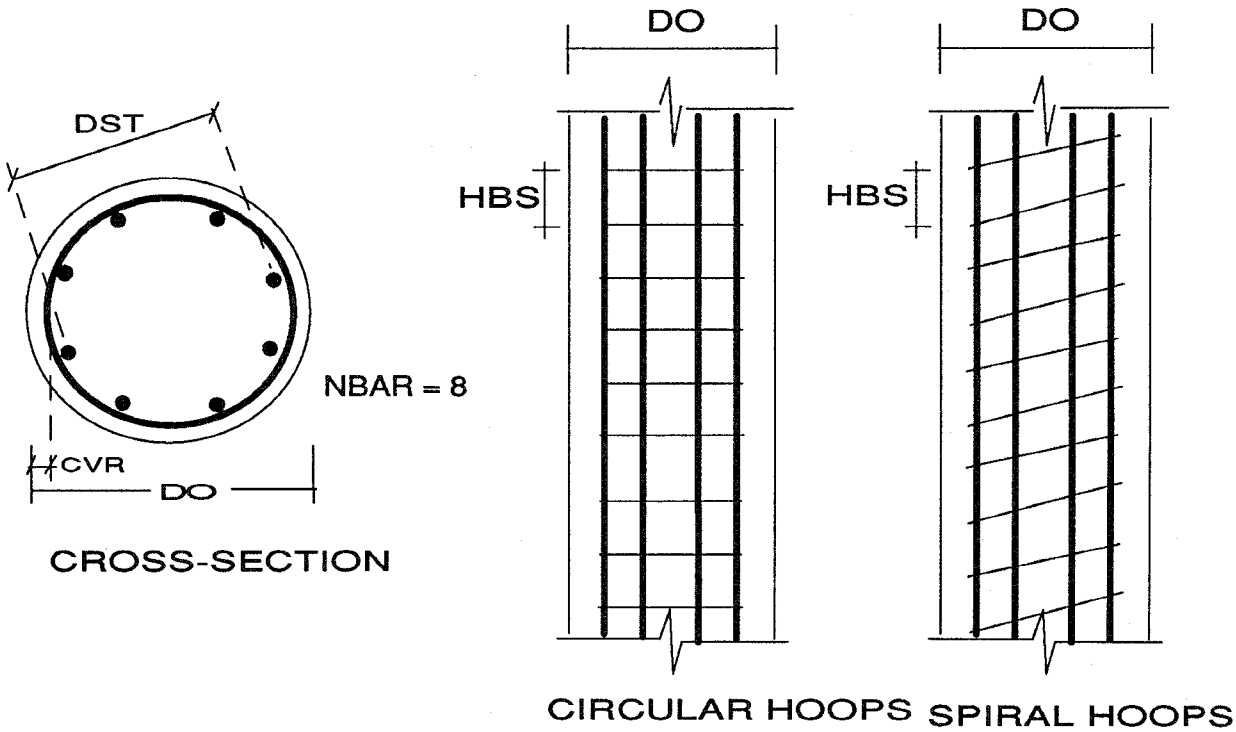

Figure A-9. Circular Concrete Column Input Details

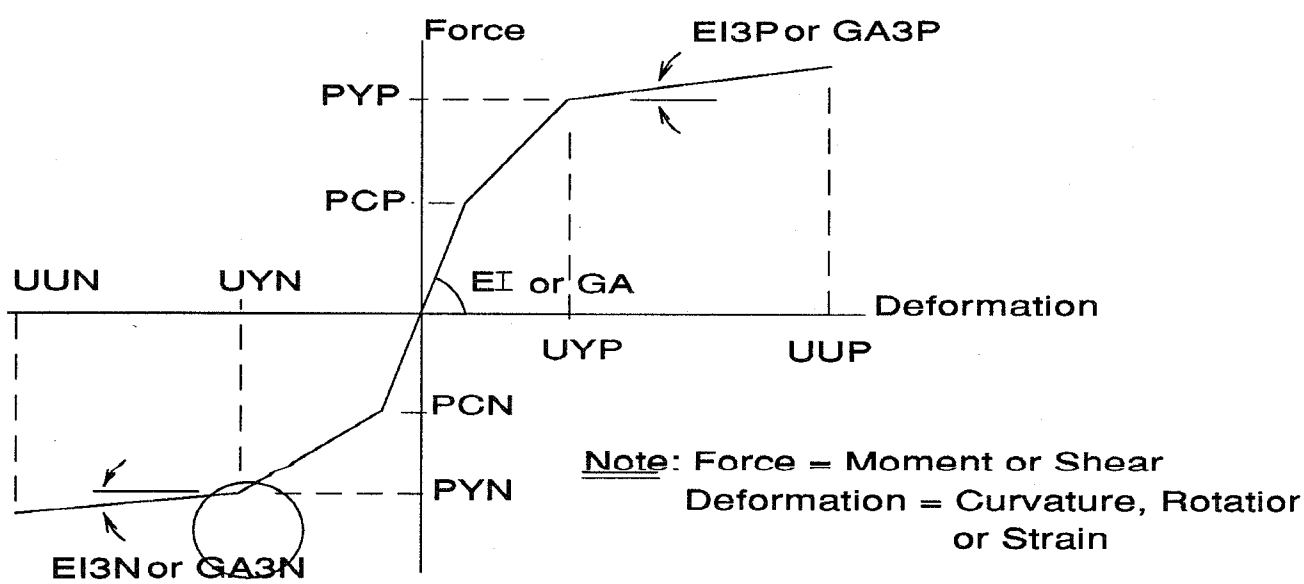

Figure A-10. Moment-Curvature Input for RC Sections

KC = Column type number
AMLC = Column Length
RAMC1 = Rigid Arm (Bottom)
RAMC2 = Rigid Arm (Top)
KHYSC = Hysteretic rule number (may be negative)
EI = Initial Flexural Rigidity (EI)
EA = Axial Stiffness (EA/L)
GA = Shear Stiffness (Shear modulus*Shear Area)
PCP = Cracking Moment (positive)
PYP = Yield Moment (positive)
UYP = Yield Curvature (positive)
UUP = Ultimate Curvature (positive)
EI3P = Post yield Flexural Stiffness (positive)
PCN = Cracking Moment (negative)
PYN = Yield Moment (negative)
UYN = Yield Curvature (negative)
UUN = Ultimate Curvature (negative)
EI3N = Post yield Flexural Stiffness (negative)

<u>SET E3: STEEL - CROSS-SECTION INPUT</u> (FIGURE A-11)

• USER_TEXT *Reference information:* upto 80 characters of text

Section Data:
• KC, IMS, AMLC, RAMC1, RAMC2, AN, D, BF, TF, TW, AX, AY, IZ, SX, ZX
• *(repeat for each of MCOL sections)*

KC = Column type number
IMS = Steel stress-strain property number
AMLC = Column Length
RAMC1 = Rigid zone length (Bottom)
RAMC2 = Rigid zone length (Top)
AN = Axial load
D = Total depth of section
BF = Flange width
TF = Flange thickness
TW = Web thickness
AX = Cross-sectional area
AY = Shear Area
IZ = Moment of Inertia
SX = Elastic Section Modulus
ZX = Plastic Section Modulus

NOTE: Zero inputs for D, BF, TF or TW require non-zero inputs for AX, IZ, SX and ZX.
Zero inputs for AX, IZ, SX or ZX require non-zero inputs for D, BF, TF and TW.
Shear deformations will be ignored if AY = 0

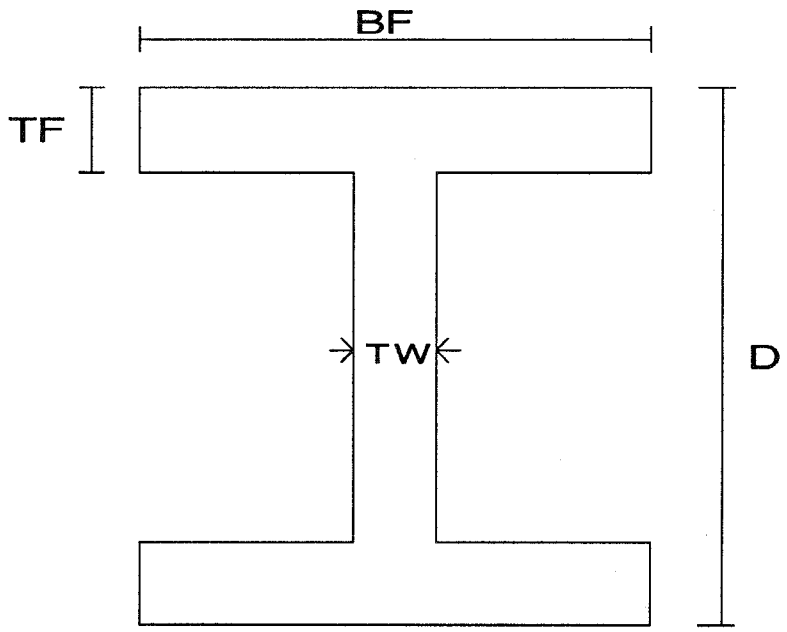

Figure A-11. Input Parameters for Symmetric Steel W-Sections

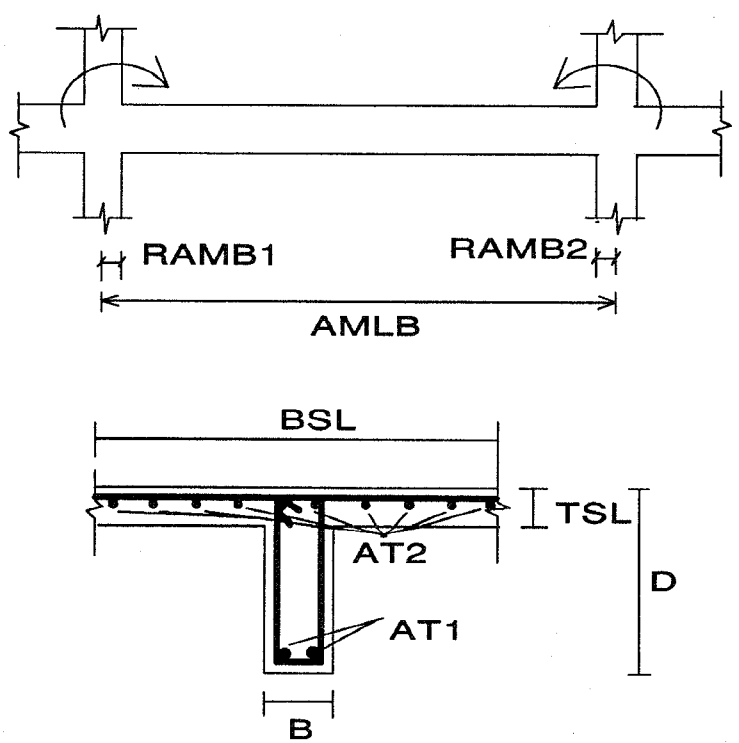

Figure A-12. Input Details for RC Beam Section

SET E4: STEEL - MOMENT CURVATURE INPUT

• USER_TEXT *Reference information:* upto 80 characters of text

General Data:
• KC, AMLC, RAMC1, RAMC2
Bottom section:
• KHYSC, EI, EA, GA, PYP, PYN
Top section (skip if symmetric, see note below):
• KHYSC, EI, EA, GA, PYP, PYN

Note: If KHYSC for bottom section is input with negative sign, section is assumed to have identical properties for top section; skip top section input

• *(repeat for each of MCOL sections)*

KC = Column type number
AMLC = Column Length
RAMC1 = Rigid zone (Bottom)
RAMC2 = Rigid zone (Top)
KHYSC = Hysteretic rule number (may be negative)
EI = Initial flexural Rigidity (EI)
EA = Axial stiffness (EA/L)
GA = Shear stiffness (Shear modulus*Shear Area)
PYP = Yield moment (positive)
PYN = Yield moment (negative)

DATA SET F: BEAM PROPERTIES

SKIP THIS INPUT IF THE STRUCTURE HAS NO BEAMS (NBEM=0)

• USER_TEXT *Reference information:* upto 80 characters of text
• IUBEM Type and option for beam section input

= 1; Reinforced Concrete; cross-section data input
= 2; Reinforced Concrete; moment-curvature input
= 3; Steel; cross-section data (bare steel, symmetric)
= 4; Steel; moment-curvature input
= 5; Composite (steel and concrete) and nonsymmetric section

IF IUBEM = 1, CONTINUE WITH SET F1
IF IUBEM = 2, GO TO SET F2
IF IUBEM = 3, GO TO SET F3
IF IUBEM = 4, GO TO SET F4 (IUBEM = 5, unavailable)

DATA SET F1 (Figure A-12)

• USER_TEXT *Reference information:* upto 80 characters of text

General data:
• KB,IMC,IMS,AMLB,RAMB1,RAMB2,
Left section:
• KHYSB, D, B, BSL TSL, BC, AT1, AT2, HBD, HBS
Right section (skip, if symmetric, see note below):
• KHYSB, D, B, BSL TSL, BC, AT1, AT2, HBD, HBS

• *(repeat for each of MBEM sections)*

Note: If KHYSB for left section is input with negative sign, section is symmetric and input for right section should be omitted.

KB = Beam type number
IMC = Concrete type number
IMS = Steel type number
AMLB = Member length
RAMB1 = Rigid zone length (left)
RAMB2 = Rigid zone length (right)
KHYSB = Hysteretic rule number (may be negative)
D = Overall depth
B = Lower width
BSL = Effective slab width (=B for rectangular section)
TSL = Slab thickness (= 0 for rectangular section)
BC = Cover to centroid of steel
AT1 = Area of bottom bars
AT2 = Area of top bars
HBD = Diameter of stirrup bars
HBS = Spacing of stirrups

SET F2: REINFORCED CONCRETE - MOMENT CURVATURE INPUT (Figure A-10)

• USER_TEXT *Reference information:* upto 80 characters of text

General Data:
• KB, AMLB, RAMB1, RAMB2
Left section:
• KHYSB, EI,GA, PCP,PYP,UYP,UUP,EI3P,PCN,PYN,UYN,UUN,EI3N
Right section (skip if symmetric, see note below):
• KHYSB, EI,EA,GA, PCP,PYP,UYP,UUP,EI3P,PCN,PYN,UYN,UUN,EI3N

Note: If KHYSB for left section is input with negative sign, section is assumed to be symmetric, and right section data input should be omitted..

• *(repeat for each of MBEM sections)*

KB = Beam type number
AMLB = Beam length
RAMB1 = Rigid zone (left)
RAMB2 = Rigid zone (right)
KHYSB = Hysteretic rule number (may be negative)
EI = Initial Flexural Rigidity (EI)
GA = Shear Stiffness (Shear modulus*Shear Area)
PCP = Cracking Moment (positive)
PYP = Yield Moment (positive)
UYP = Yield Curvature (positive)
UUP = Ultimate Curvature (positive)
EI3P = Post yield Flexural Stiffness (positive)
PCN = Cracking Moment (negative)
PYN = Yield Moment (negative)
UYN = Yield Curvature (negative)
UUN = Ultimate Curvature (negative)
EI3N = Post yield Flexural Stiffness (negative)

<u>SET F3: STEEL - CROSS-SECTION INPUT</u>

• USER_TEXT *Reference information:* upto 80 characters of text

Section Data:

• KB, IMS, AMLC, RAMC1, RAMC2, D, BF, TF, TW, AX, AY, IZ, SX, ZX
• *(repeat for each of MBEM sections)*

KC = Column type number
IMS = Steel stress-strain property number
AMLC = Column Length
RAMC1 = Rigid zone length (Bottom)
RAMC2 = Rigid zone length (Top)
AN = Axial load
D = Total depth of section
BF = Flange width
TF = Flange thickness
TW = Web thickness
AX = Cross-sectional area
AY = Shear Area
IZ = Moment of Inertia
SX = Elastic Section Modulus
ZX = Plastic Section Modulus

SEE NOTES FOR SET E-3

SET F4: STEEL - MOMENT CURVATURE INPUT

• USER_TEXT *Reference information:* upto 80 characters of text

General Data:
• KB, AMLB, RAMB1, RAMB2
Left section:
• KHYSB, EI, GA, PYP, PYN
Right section (skip if symmetric, see note below):
• KHYSB, EI, GA, PYP, PYN

Note: If KHYSB for left section is input with negative sign, section is assumed to be symmetric, and right section data input should be omitted..

• *(repeat for each of MBEM sections)*

KB = Beam type number
AMLB = Beam Length
RAMB1 = Rigid zone (left)
RAMB2 = Rigid zone (right)
KHYSB = Hysteretic rule number (may be negative)
EI = Initial flexural Rigidity (EI)
GA = Shear stiffness (Shear modulus*Shear Area)
PYP = Yield moment (positive)
PYN = Yield moment (negative)

SET G: SHEAR WALL PROPERTIES (See Figure A-13)

SKIP THIS INPUT IF THE STRUCTURE HAS NO SHEAR WALLS

• USER_TEXT *Reference information:* upto 80 characters of text

• IUWAL Type of wall input
= 0; Cross-section input
= 1; Moment-curvature and shear-strain input

IF IUWAL = 1, GO TO SET G2

SET G1: CROSS-SECTION INPUT

• USER_TEXT *Reference information:* upto 80 characters of text

General Data:
• KW,IMC,KHYSW(1),KHYSW(2),KHYSW(3),AN,AMLW,NSECT
For each of the NSECT sections, input the following
    • KS,IMS,DWAL,BWAL,PT,PW
    • *repeat NSECT times*
• *repeat for each of MWAL sections*

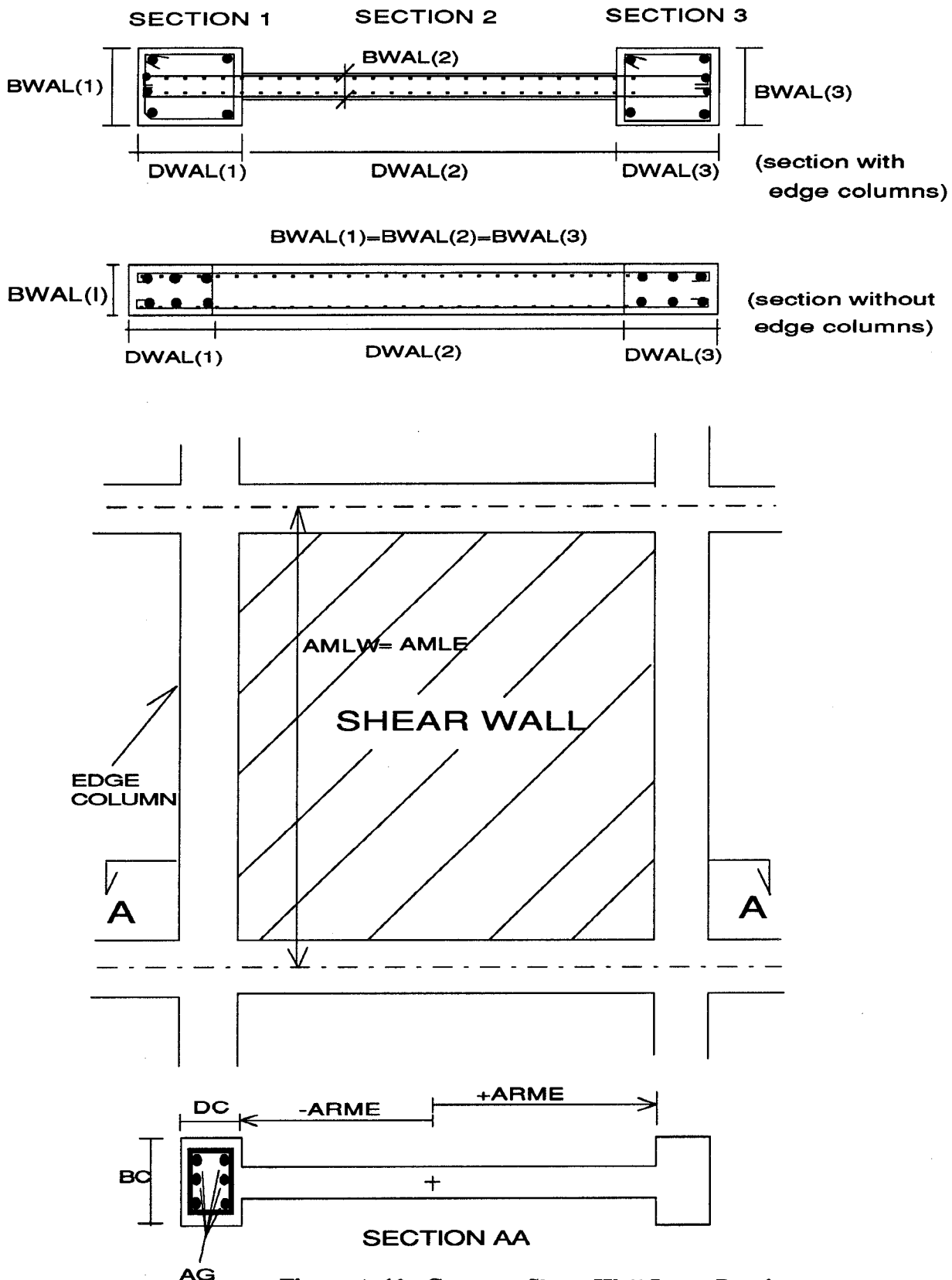

Figure A-13. Concrete Shear Wall Input Details

KS = Section number
IMS = Steel type number
DWAL = Depth of section
BWAL = Width of section
PT = Vertical reinforcement ratio (%)
PW = Horizontal reinf ratio (%)

KW = Shear wall type number
IMC = Concrete type number
KHYSW(1) = Hysteretic Rule Number (bottom)
KHYSW(2) = Hysteretic Rule Number (top)
KHYSW(3) = Hysteretic Rule Number (shear)
AN = Axial load
AMLW = Height of shear wall
NSECT = Number of Sections

<u>SET G2: MOMENT CURVATURE INPUT</u> (Figure A-10)

• USER_TEXT *Reference information:* upto 80 characters of text

General Data:
• KW, AMLW, EAW
Flexure - Bottom section:
• KHYSW, EI,PCP,PYP,UYP,UUP,EI3P, PCN,PYN,UYN,UUN,EI3N
Flexure - Top section (skip if symmetric, see note below)
• KHYSW, EI,PCP,PYP,UYP,UUP,EI3P, PCN,PYN,UYN,UUN,EI3N
Shear properties:
• KHYSW, GA,PCP,PYP,UYP,UUP,GA3P, PCN,PYN,UYN,UUN,GA3N

Note: If KHYSW for bottom section is input with negative sign, section is symmetric, hence, do not input top section data
• *repeat for each of MWAL sections*

Flexural data:
KW = Wall type number
AMLW = Wall length
EAW = Axial Stiffness (EA/L)
KHYSW = Hysteretic rule number (may be negative)
EI = Initial flexural stiffness (EI)
PCP = Cracking Moment (positive)
PYP = Yield Moment (positive)
UYP = Yield Curvature (positive)
UUP = Ultimate Curvature (positive)
EI3P = Post Yield Flexural Stiffness (positive)
PCN = Cracking Moment (negative)

PYN = Yield Moment (negative)
UYN = Yield Curvature (negative)
UUN = Ultimate Curvature (negative)
EI3N = Post yield Flexural Stiffness (negative)

Shear data:
KHYSW = Hysteretic Rule Number
GA = Initial Shear Stiffness (shear modulus*area)
PCP = Cracking Shear (positive)
PYP = Yield Shear (positive)
UYP = Yield Shear strain (positive)
UUP = Ultimate Shear strain (positive)
GA3P =Post Yield Shear Stiffness (positive)
PCN = Cracking Shear (negative)
PYN = Yield Shear (negative)
UYN = Yield Shear strain (negative)
UUN = Ultimate Shear strain (negative)
GA3N =Post Yield Shear Stiffness (negative)

SET H: EDGE COLUMN PROPERTIES (See Figures A-13)

SKIP THIS INPUT IF THE STRUCTURE HAS NO EDGE COLUMNS

Do not duplicate edge column data if already input as part of shear wall section

- USER_TEXT *Reference information:* upto 80 characters of text

- KE,IMC,IMS,AN,DC,BC,AG,AMLE,ARME

KE = Edge column type number
IMC = Concrete type number
IMS = Steel type number
AN = Axial load
DC = Depth of edge column
BC = Width of edge column
AG = Gross area of main bars
AMLE = Member length
ARME = Arm length

SET I: TRANSVERSE BEAM PROPERTIES (See Figure A-14)

THIS INPUT NOT REQUIRED IF STRUCTURE HAS NO TRANSVERSE BEAMS

- USER_TEXT *Reference information:* upto 80 characters of text

- KT,AKV,ARV,ALV
- *(repeat for each of MTRN types)*

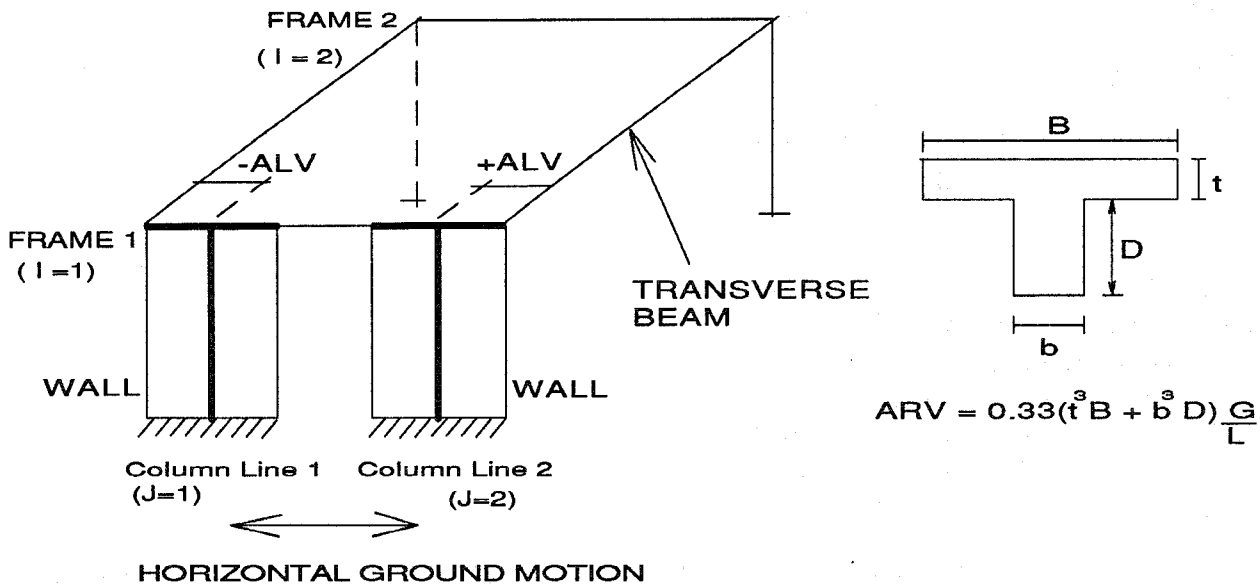

Figure A-14. Transverse Beam Input Parameters

KT = Transverse beam type number
AKV = Vertical Stiffness
ARV = Torsional Stiffness
ALV = Arm length

NOTES: 1. Transverse elements are assumed to remain elastic. The degree of fixity at the ends will depend on the state(cracked/yielded) of the joint and the members that frame into the joint before and during the application of load. If the entire region is expected to stay elastic, then the vertical stiffness should be computed as $AKV = 12\ EI/L^3$. *In the extreme case that one of ends do not transmit stiffness due to yielding of adjoining members or deterioration of the joint, then* $AKV = 3\ EI/L^3$.. *An intermediate value is a good average approximation.*

*2. If duplicate frames are present, extreme care should be taken in specifying transverse beam properties. The program multiplies the input values by the number of duplicate frames to which they are attached. For example, for the frames shown in Figure A-1, NDUP(1) = NDUP(2) = 2. The program will factor the input stiffness values by (NDUP(1)*NDUP(2))=4.0. Input stiffnesses should, therefore, be modified to account for this effect. If the modeling of transverse elements is crucial to the analysis, the use of duplicate frames should be avoided.*

SET J: ROTATIONAL SPRING PROPERTIES

THIS INPUT NOT REQUIRED IF ROTATIONAL SPRINGS ARE NOT SPECIFIED

- KHYSR, EI,PCP,PYP,UYP,UUP,EI3P, PCN,PYN,UYN,UUN,EI3N
- *(repeat for each of MSPR springs)*

KHYSR = Hysteretic Rule Number
EI = Initial Rotational Stiffness
PCP = Cracking moment (positive)
PYP = Yield moment (positive)
UYP = Yield rotation (positive, radians)
UUP = Ultimate rotation (positive, radians)
EI3P = Post-yield stiffness ratio (positive)
PCN = Cracking moment (negative)
PYN = Yield moment (negative)
UYN = Yield rotation (negative)
UUN = Ultimate rotation capacity (negative)
EI3N = Post yield stiffness ratio (negative)

NOTES: Spring properties, unlike other element types, are specified in terms of moment and rotation (in radians). The envelope follows the same nonsymmetric trilinear pattern as shown in Figure A-10.

SET K: JOINT PANEL PROPERTIES

- USER_TEXT *Reference information:* upto 80 characters of text
- KJ, KHYSJ, DP, BP, TP, G, PYP, PYN

KJ = Panel type number
KHYSJ = Hysteretic rule number (may be negative)
DP = Depth of panel (typically the depth of the beam)
BP = Width of panel (typically the depth of the column)
TP = Thickness of Panel (typically the thickness of the column web)
G = Shear modulus
PYP = Yield shear (positive)
PYN = Yield shear (negative)

ELEMENT CONNECTIVITY INPUT

NOTE: *Element connectivity is established through the 3 positional locaters described in Figure A-1: a story level, a frame number and a column line. The hypothetical structure shown below is used to demonstrate the input format. Only a representative data set is shown.*

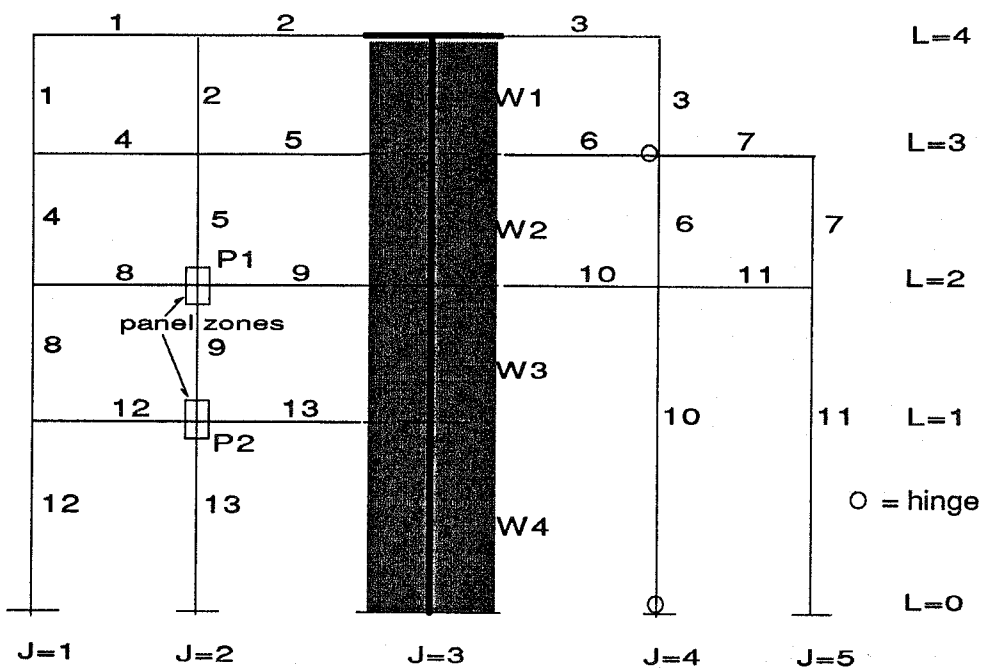

ELEMENT TYPE	Number	Type	IC	JC	LBC	LTC
COLUMNS	1	1	1	1	3	4
	10	4	1	4	0	2
BEAMS	Number	Type	LB	IB	JLB	JRB
	1	1	4	1	1	2
	6	3	3	1	3	4
WALLS	Number	Type	IW	JW	LBW	LTW
	1	1	1	3	3	4
	2	2	1	3	2	3
JOINT PANELS	Number	Type	IFJ	JJT	LJT	
	1	1	1	2	2	
	2	1	1	2	1	

Figure A-15. Element Connectivity

SET L: COLUMN CONNECTIONS (See Figure A-15)

SKIP THIS INPUT IF THE STRUCTURE HAS NO COLUMNS

- USER_TEXT *Reference information*: upto 80 characters of text
- M,ITC,IC,JC,LBC,LTC
- *(NCOL lines of data)*

M = Column number
ITC = Column type number
IC = Frame number
JC = Column Line number
LBC = Story level at bottom of column
LTC = Story level at top of column

SET M: BEAM CONNECTIVITY (See Figure A-15)

SKIP THIS INPUT IF STRUCTURE HAS NO BEAMS

- USER_TEXT *Reference information*: upto 80 characters of text
- M,ITB,LB,IB,JLB,JRB
- *(NBEM lines of data)*

M = Beam number
ITB = Beam type number
LB = Story level
IB = Frame number
JLB = Column Line number of left section
JRB = Column Line number of right section

SET N: SHEAR WALL CONNECTIVITY (See Figure A-15)

SKIP THIS INPUT IF STRUCTURE HAS NO SHEAR WALLS

- USER_TEXT *Reference information:* upto 80 characters of text
- M,ITW,IW,JW,LBW,LTW
- *(NWAL lines of data)*

M = Wall number
ITW = Wall type number
IW = Frame number
JW = Column line number
LBW = Story level at bottom
LTW = Story level at top

SET O: EDGE COLUMN CONNECTIVITY

SKIP THIS INPUT IF STRUCTURE HAS NO EDGE COLUMNS

- USER_TEXT Reference information: upto 80 characters of text
- M,ITE,IE,JE,LBE,LTE
- *(NEDG lines of data)*

M = Edge column number
ITE = Edge column type number
IE = Frame number
JE = Column line number
LBE = Story level at bottom of column
LTE = Story level at top of column

SET P: TRANSVERSE BEAM CONNECTIVITY

SKIP THIS INPUT IF STRUCTURE HAS NO TRANSVERSE BEAMS

- USER_TEXT Reference information: upto 80 characters of text
- M,ITT,LT,IWT,JWT,IFT,JFT
- *(NTRN lines of data)*

M = Transverse beam number
ITT = Transverse beam type number
LT = Story level
IWT = Frame number of origin of transverse beam*
JWT = Column line of origin of transverse beam*
IFT = Frame number of connecting wall or column
JFT = Column line of connecting wall or column

*NOTES: *For beam-to-wall connections, IWT and JWT refer to the I,J locations of the wall.*

SET Q: SPRING LOCATIONS (See Figure A-16)

SKIP THIS INPUT IF ROTATIONAL SPRINGS ARE NOT SPECIFIED

- USER_TEXT *Reference information*: upto 80 characters of text
- M, ISP, JSP, LSP, KSPL
- *(NSPR lines of data)*

M = Spring number
ISP = Frame number
JSP = Column line number
LSP = Story level
KSPL = Relative spring location as follows:

Code for KSPL -> = 1, spring on beam, left of joint
= 2, spring on column, top of joint
= 3, spring on beam, right of joint
= 4, spring on column, bottom of joint

NOTE: The number of springs at a joint is limited to one less than the total number of members framing into the joint

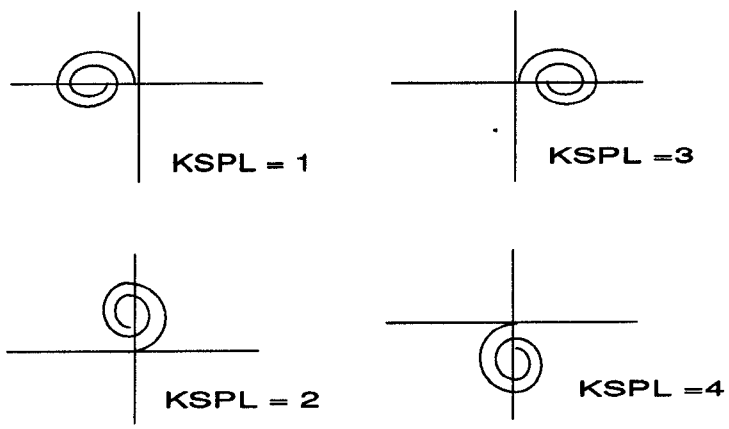

Figure A-16. Spring Location Specification

SET R: JOINT PANEL LOCATIONS

SKIP THIS INPUT IF MOMENT RELEASES ARE NOT REQUIRED (NMR = 0)

- USER_TEXT *Reference information:* upto 80 characters of text
- IJ, ITJ, IFJ, JJT, LJT
- (NJNT lines of data)

IJ = Joint panel number
ITJ = Joint panel type
IFJ = Frame number
JJT = Column Line number
LJT = Story level

SET S: MOMENT RELEASES

SKIP THIS INPUT IF MOMENT RELEASES ARE NOT REQUIRED (NMR = 0)

- USER_TEXT — *Reference information:* upto 80 characters of text
- IDM, IHTY, INUM, IREG
- (NMR lines of data)

IDM = ID number
IHTY = Element type using following code
CODE: 1 = COLUMN
2 = BEAM
3 = WALL
INUM = Column, Beam or Wall number
IREG = Location of hinge or moment release
= 1, BOTTOM or LEFT
= 2, TOP or RIGHT

ANALYSIS OPTIONS:

- USER_TEXT — *Reference information*: upto 80 characters of text
- IOPT — Option for continuing analysis
  = 0 , STOP (Data check mode)
  = 1 , Inelastic incremental analysis with static loads
  = 2 , Monotonic "pushover" analysis including static loads (if specified)
  = 3 , Inelastic dynamic analysis including static loads (if specified)
  = 4 , Quasi-static cyclic analysis including static loads (if specified)

Notes: It is generally advisable to use the "data check" mode for the first trial run of a new data set. The program performs only minimal checking of input data. Structural elevation plots generated by IDARC help identify errors in connectivity specification. Since IDARC prints all input data almost immediately after they are read, the task of detecting the source of input errors is generally expedited. It is also important to verify all printed output, before carrying out a time-history analysis.

OPTION 1 permits an independent nonlinear static analysis. Static loads are input in data set T1. OPTIONS 2 - 4 may be combined with long-term static loads which is input in data set T1. Initial forces and moments generated by the static loads will remain on the structure for all the other options. If a static analysis is not performed, the axial loads input as part of column properties will be used as initial axial forces.

SET T1: LONG-TERM LOADING (STATIC LOADS)

NOTE: THIS INPUT IS REQUIRED FOR ALL ANALYSIS OPTIONS.

Control Information

- USER_TEXT *Reference information*: upto 80 characters of text
- NLU,NLJ,NLM,NLC

NLU = No. of uniformly loaded beams
NLJ = No. of laterally loaded joint
NLM = No. of specified nodal moments
NLC = No. of concentrated vertical loads

IF NLU = NLJ = NLM = NLC = 0, and IOPT = 2, CONTINUE TO SET T2.
IF NLU = NLJ = NLM = NLC = 0, and IOPT = 3, CONTINUE TO SET T3.
IF NLU = NLJ = NLM = NLC = 0, and IOPT = 4, CONTINUE TO SET T4.

Next Data Set:

- JSTP,IOCRL

JSTP = No. of incremental steps in which to apply the static loads (default = 1 step)
IOCRL = Steps between printing output (If IOCRL=0, only final results will be printed)

NOTES: Dead and live loads that exist prior to the application of seismic or quasi-static cyclic loads can be input in this section. Such loads are typically specified through uniformly loaded beam members. An option is also available for lateral load analysis and the specification of nodal loads at joints. When used in conjenction with Options 2-4, the resulting forces are carried forward to the monotonic, dynamic and quasi-static analysis.

Uniformly Loaded Beam Data

SKIP THIS INPUT SECTION IF NLU=0

- USER_TEXT *Reference information*: upto 80 characters of text
- IL, IBN, FU
- (NLU lines of data)

IL = Load number
IBN = Beam number
FU = Magnitude of load (Force/length)

Laterally Loaded Joints

SKIP THIS INPUT SECTION IF NLJ=0

- USER_TEXT *Reference information*: upto 80 characters of text
- IL, LF, IF, FL
- (NLJ lines of data)

IL = Load number
LF = Story level number
IF = Frame number
FL = Magnitude of load

Nodal Moment Data

SKIP THIS INPUT SECTION IF NLM=0

- USER_TEXT *Reference information*: upto 80 characters of text
- IL, IBM, FM1, FM2
- (NLM lines of data)

IL = Load number
IBM = Beam number
FM1 = Nodal moment (left) *(See Figure A-9 for beam moment sign convention)*
FM2 = Nodal moment (right)

Concentrated Vertical Loads

SKIP THIS INPUT SECTION IF NLC=0

- USER_TEXT *Reference information*: upto 80 characters of text
- IL, IFV, LV, JV, FV
- (NLC lines of data)

IL = Load number
IFV = Frame number
LV = Story level number
JV = Column line number
FV = Magnitude of load

IF IOPT = 2, CONTINUE TO SET T2.
IF IOPT = 3, CONTINUE TO SET T3.
IF IOPT = 4, CONTINUE TO SET T4.

SET T2: MONOTONIC PUSH-OVER ANALYSIS (IOPT = 2)

- USER_TEXT *Reference information*: upto 80 characters of text
- PMAX, MSTEPS

PMAX = Estimate of base shear strength coefficient (ratio of lateral load capacity to total weight)
MSTEPS = Number of steps in which to apply the monotonically increasing load

*DEFAULT VALUES: PMAX = 1/NSO + 0.01*NSO ; MSTEPS = 40*

NOTES: The program uses the PMAX value only to determine the load steps for the push-over analysis. The prescribed base shear (product of PMAX and total structure weight) is applied incrementally in MSTEPS steps as an inverted triangular load, until the top story displacement reaches 2% of the total structure height OR the specified PMAX is reached. If the program output shows a linear shear vs. deformation plot, the base shear estimate is too low. If the maximum displacement is reached too quickly (indicated by too few points in the plot), the estimate is too high.

IF IOPT = 2 , STOP HERE

SET T3: DYNAMIC ANALYSIS CONTROL PARAMETERS (IOPT = 3)

- USER_TEXT *Reference information*: upto 80 characters of text
- GMAXH,GMAXV,DTCAL,TDUR,DAMP

GMAXH = Peak horizontal acceleration (g's)
GMAXV = Peak vertical acceleration (g's)
DTCAL = Time step for response analysis (secs)
TDUR = Total duration of analysis (secs)
DAMP = Damping coefficient (% of critical)

NOTES: The input accelerogram is scaled uniformly to achieve the specified peak acceleration. DTCAL should not exceed the time interval of the input wave, DTINP. The ratio (DTINP/DTCAL) must yield an integer number. TDUR may be less than the total duration of the earthquake. If TDUR is greater than the total time duration of the input wave, a free vibration analysis of the system will result for the remaining time.

<u>INPUT WAVE DATA</u>

- USER_TEXT *Reference information:* upto 80 characters of text
- IWV,NDATA,DTINP

IWV = 0, Vertical component of acceleration <u>not</u> included
= 1, Vertical component of acceleration is included
NDATA = Number of points in earthquake wave files
DTINP = Time interval of input wave

WAVE TITLE

- NAMEW — Alpha-numeric title for input wave upto 80 characters

FILENAME - HORIZONTAL COMPONENT

- WHFILE

Name of file (with extension) from which to read horizontal component of earthquake record

Note: Filename should not exceed 12 characters incl. extension

- WINPH(I),I=1,NDATA

Horizontal component of earthquake wave (NDATA points) is read from the file ***WHFILE***

WAVE DATA - VERTICAL COMPONENT

SKIP THIS INPUT IF IWV .EQ. 0

- WVFILE

Name of file (with extension) from which to read vertical component of earthquake record

Note: Filename should not exceed 12 characters

- WINPV(I),I=1,NDATA

Vertical component of earthquake wave (NDATA points) read from the file ***WVFILE***

NOTES: *Accelerogram data may be input in any system of units. The accelerogram is scaled uniformly to achieve the specified peak values of GMAXH and GMAXV. Since data is read in free format, as many lines as necessary to read the entire wave must be input.*

GO TO DATA SET U

SET T4: QUASI-STATIC CYCLIC ANALYSIS (IOPT=4)

• USER_TEXT	*Reference information:* upto 80 characters of text
• ICNTRL	Cyclic Analysis option = 0, Force controlled input = 1, displacement controlled input
• NLDED	Number of story levels at which the force /displacement is applied
• NSTLD(I),I=1,NLDED	List of story levels at which the force or displacement is applied
• NPTS	Number of points to be read in force or displacement history
• F(I,1),I=1,NPTS	first data set (NPTS) at story level NSTLD(1)

- F(I,2),I=1,NPTS next data set (NPTS) at story level NSTLD(2)
- *(repeat for each of NLDED levels)*
- ITCAL No. of points to interpolate between prescribed load steps

The analysis is performed at ITCAL interpolated points for each step

SET U: OUTPUT CONTROL

- USER_TEXT *Reference information:* upto 80 characters of text
- NSOUT,DTOUT,ISO(I),I=1,NSOUT
- FNAME (I)
- *(continue with filenames for each of NSOUT output sets)*

NSOUT = No of output histories
DTOUT = Output time interval
ISO(I) = Output story numbers
FNAME(I) = Filename to store time history output for story number ISO(I)

NOTES: For the quasi-static cyclic analysis option, DTOUT refers to the number of steps between output printing; for example, DTOUT=2 will print results every 2 steps.

SET V: ELEMENT HYSTERESIS OUTPUT

- USER_TEXT *Reference information:* upto 80 characters
- KCOUT, KBOUT, KWOUT, KSOUT, KPOUT

KCOUT = Number of columns for which hysteresis output is required
KBOUT = Number of beams for which hysteresis output is required
KWOUT = Number of walls for which hysteresis output is required
KSOUT = Number of springs for which hysteresis output is required
KPOUT = Number of panels for which hysteresis output is required

<u>COLUMN OUTPUT SPECIFICATION</u>
SKIP THIS INPUT IF KCOUT = 0

- USER_TEXT ***Reference information:* upto 80 characters**
- ICLIST(I), I=1,KCOUT List of column numbers for which moment-curvature hysteresis is required

<u>BEAM OUTPUT SPECIFICATION</u>
SKIP THIS INPUT IF KBOUT = 0

- USER_TEXT ***Reference information:* upto 80 characters**
- IBLIST(I), I=1,KBOUT List of beam numbers for which moment-curvature hysteresis is required

SHEAR WALL OUTPUT SPECIFICATION

SKIP THIS INPUT IF KWOUT = 0

• USER_TEXT	***Reference information:*** **upto 80 characters**
• IWLIST(I), I=1,KWOUT	List of shear wall numbers for which moment-curvature and shear-strain hysteresis is required

DISCRETE SPRING OUTPUT SPECIFICATION

SKIP THIS INPUT IF KSOUT = 0

• USER_TEXT	*Reference information:* upto 80 characters
• ISLIST(I), I=1,KSOUT	List of spring numbers for which moment-rotation hysteresis is required

JOINT PANEL OUTPUT SPECIFICATION

SKIP THIS INPUT IF KPOUT = 0

• USER_TEXT	*Reference information:* upto 80 characters
• ISLIST(I), I=1,KPOUT	List of joint panel numbers for which shear vs. panel deformation hysteresis is required

NOTES: All the output generated in this section refers to moment-curvature hysteresis for beams, columns and shear-walls; in addition shear vs. shear strain history is generated for walls; whereas moment-rotation hysteresis is produced for the discrete spring elements. Output filenames are generated as follows:

IF KCOUT = 2, AND ICLIST(1) = 3 AND ICLIST(2) = 12, THEN THE FOLLOWING FILES WILL BE CREATED:

COL_003.PRN and COL_012.PRN

(where 3 and 12 refer to the element numbers for which output is requested)

END OF DATA INPUT

APPENDIX B

SAMPLE DATA SETS

DATA SET 1

```
SAMPLE PROBLEM TO VERIFY MEMBER MODEL : NONLINEAR STATIC ANALYSIS
CONTROL DATA
1 1 1 1 0
ELEMENT TYPES
2 1 0 0 0 0 0
ELEMENT DATA
2 1 0 0 0 0 0 0
UNIT SYSTEM
1
FLOOR ELEVATIONS
120.0
DESCRIPTION OF IDENTICAL FRAMES
1
PLAN CONFIGURATION
2
NODAL WEIGHTS
1 1 100.0 100.0
ENVELOPE GENERATION
1
HYSTERESIS MODELLING
1
1 2 0.05 0.0 0.0 0.0 0.0 0.0
COLUMN PROPERTIES
4
MOMENT CURVATURE ENVELOPE FOR THE STEEL COLUMN
1 120.0 0.0 0.0
  1 7.5E6 5000.0 0.0 1800.0 1800.0
  1 7.5E6 5000.0 0.0 1800.0 1800.0
2 120.0 0.0 0.0
  1 7.5E6 5000.0 0.0 1800.0 1800.0
  1 7.5E6 5000.0 0.0 1800.0 1800.0
BEAM PROPERTIES
4
MOMENT CURVATURE ENVELOPE FOR BEAM
1 180.0 0.0 0.0
 1 5E6 0.0 650.0 650.0
 1 5E6 0.0 650.0 650.0
COLUMN CONNECTIONS
1 1 1 1 0 1
2 2 1 2 0 1
BEAM CONNECTIONS
1 1 1 1 1 2
ANALYSIS TYPE INELASTIC INCREMENTAL ANALYSIS WITH STATIC LOADS
1
STATIC ANALYSIS - LATERAL LOAD AT FLOOR
0 1 0 0
20 1
LATERALLY LOADED JOINTS (Change magnitude for other cases)
1 1 1 45.0
```

DATA SET 2

```
SAMPLE PROBLEM TO VERIFY MEMBER MODEL : NONLINEAR DYNAMIC ANALYSIS
CONTROL DATA
1 1 1 1 0
ELEMENT TYPES
2 1 0 0 0 0 0
ELEMENT DATA
2 1 0 0 0 0 0 0
UNIT SYSTEM
1
FLOOR ELEVATIONS
120.0
DESCRIPTION OF IDENTICAL FRAMES
1
PLAN CONFIGURATION
2
NODAL WEIGHTS
1 1 100.0 100.0
ENVELOPE GENERATION
1
HYSTERESIS MODELLING
1
1 2 0.05 0.0 0.0 0.0 0.0 0.0
COLUMN PROPERTIES
4
MOMENT CURVATURE ENVELOPE FOR THE STEEL COLUMN
1 120.0 0.0 0.0
  1 7.5E6 5000.0 0.0 1800.0 1800.0
  1 7.5E6 5000.0 0.0 1800.0 1800.0
2 120.0 0.0 0.0
  1 7.5E6 5000.0 0.0 1800.0 1800.0
  1 7.5E6 5000.0 0.0 1800.0 1800.0
BEAM PROPERTIES
4
MOMENT CURVATURE ENVELOPE FOR BEAM
1 180.0 0.0 0.0
 1 5E6 0.0 650.0 650.0
 1 5E6 0.0 650.0 650.0
COLUMN CONNECTIONS
1 1 1 1 0 1
2 2 1 2 0 1
BEAM CONNECTIONS
1 1 1 1 1 2
ANALYSIS TYPE INELASTIC INCREMENTAL ANALYSIS WITH STATIC LOADS
3
Long term loads
0 0 0 0
Dynamic analysis
0.12 0.0 0.02 10.0 0.0
Wave Data
0, 1001, 0.02
ElCentro
ELC.DAT
OUTPUT CONTROL
1 0.02 1
ID4G.PRN
ELEMENT HYSTERESIS OUTPUT
2 1 0 0
COLUMN OUTPUT
1 2
BEAM OUTPUT
1
```

DATA SET 3

```
Lehigh Test  - Panel Zone Deformations
Control data
2, 1, 0, 1, 0
Elem types
2, 2, 0, 0, 0, 0, 1
Elem data
2, 2, 0, 0, 0, 0, 1, 0
Units
1
Floor elev
54.0 108.0
Duplicate frames
1
Plan config
3
Nodal weights
1, 1, 10.0 10.0 10.0
2, 1,  0.0 10.0  0.0
Env generation
0
Steel prop
1, 40.0, 58.8, 30000.0, 300.0, 3.0
Hys model
1
1, 1, 0.01 0 0 0 0 0
Column prop
3
Steel section data
1, 1, 1, 54.0 0.0 12.0 0.0  0 0 0 0 26.5 6.16 999.0 357 360
2, 1, 1, 54.0 12.0 0.0 0.0  0 0 0 0 26.5 6.16 999.0 357 360
Beam prop
3
Steel section data
1, 1, 1, 68.0, 0.0 7.0 0 0 0 0 18.2 10.21 1550.0  131.0 153.0
2, 1, 1, 68.0, 7.0 0.0 0 0 0 0 18.2 10.21 1550.0  131.0 153.0
Joint Panels
1 1 24.0 14.0 0.44 11000.0  39.0 39.0
Column conn
1, 1, 1, 2, 0, 1
2, 2, 1, 2, 1, 2
Beam conn
1, 1, 1, 1, 1, 2
2, 2, 1, 1, 2, 3
Panel Location
1 1 1 2 1
Analysis
4
Long Term Loads - none
0, 0, 0, 0
Quasistatic Loading : Disp Control
1
2
2 7  ! Refers to DOFs
32
0 -2 -4 -6 -6.65  -6 -4 -2  0  2  4  6   6.7  6  4  2  0
  -2 -4 -6 -7.75  -6 -4 -2  0  2  4  6  10.2  6  4  2
0  2  4  6  6.65   6  4  2  0 -2 -4 -6  -6.7 -6 -4 -2  0
   2  4  6  7.75   6  4  2  0 -2 -4 -6 -10.2 -6 -4 -2
40
Output control
1, 1, 2
LEHI.PRN   Next 2 lines: Misc Output - None requested ; 0 0 0 0 0
```

DATA SET 4

```
UCB TEST : Verification of Hysteresis Model
CONTROL DATA
2, 1, 0, 2, 0
ELEM TYPES
2, 1, 0, 0, 0, 0, 0
ELEM DATA
3, 2, 0, 0, 0, 0, 0, 0
UNITS
1
FLOOR ELEV
17.0, 158.0
DUPLICATE FRAMES
1
PLAN CONFIG
3
NODAL WEIGHTS
1, 1, 10.0 10.0 10.0
2, 1,  0.0 10.0  0.0
ENV GENERATION
0
STEEL PROP
1, 58.5, 58.8, 30000.0, 5.0, 2.0
2, 53.5, 53.8, 30000.0, 5.0, 2.0
HYS MODEL
1
1, 3, 0.2 0.4 0.24 0.4 0.9 1.2
COLUMN PROP
3
STEEL SECTION DATA
1, 1, 1,  17.0 0.0 0.0  0.0  0 0 0 0 30.6  0.0  100.0 2000 3000
2, 1, 1, 141.0 0.0 0.0  0.0  0 0 0 0 44.2 22.4 9040.0 393.0 581.0
BEAM PROP
3
STEEL SECTION DATA
1, 1, 1, 68.0, 0.0 0.0 0 0 0 0 75.6 19.25 3400.0 415.0 487.0
COLUMN CONN
1, 1, 1, 1, 0, 1
2, 1, 1, 3, 0, 1
3, 2, 1, 2, 1, 2
BEAM CONN
1, 1, 1, 1, 1, 2
2, 1, 1, 1, 2, 3
ANALYSIS
4
STATIC
0, 0, 0, 0
QUASISTATIC
1
2
1 8
52
0 0 0 0 0 0 0 0 0 0 0 0 0 0 0 0 0 0 0 0 0 0 0 0 0 0 0 0 0 0 0 0
0 0 0 0 0 0 0 0 0 0 0 0 0 0 0 0 0 0 0 0 0 0
0.0 0.8 -0.8 0.0 1.0 1.5 1.75 1.5  1.0   0.0 -1.0 -1.5 -1.75 -1.5 -1.0
0.0 1.0 1.5 1.75 1.5 1.0 0.0 -1.0 -1.5 -1.75 -1.5 -1.0   0.0  1.0  1.5 1.82
1.5 1.0 0.0 -1.0 -1.5 -1.82 -1.5 -1.0 0.0 1.0 1.5 1.85 1.5 1.0 0.0
-1.0 -1.5 -1.85 -1.5 -1.0 0.0
20
OUTPUT CONTROL
1, 1, 2
BEAM_TIP.PRN
MISC OUTPUT; Next Line: 0 0 0 0 0
```