FIRE DETECTION: THE STATE-OF-THE-ART

Richard L. P. Custer and
Richard G. Bright

Fire Technology Branch
Programmatic Center for Fire Research
Institute for Applied Technology
National Bureau of Standards
Washington, D.C. 20234

Sponsored by

Aerospace Safety Research and Data Institute
Lewis Research Center
Cleveland, Ohio 44135

U.S. DEPARTMENT OF COMMERCE, Frederick B. Dent, *Secretary*
NATIONAL BUREAU OF STANDARDS, Richard W. Roberts, *Director*

Issued June 1974

National Bureau of Standards Technical Note 839

Nat. Bur. Stand. (U.S.), Tech. Note 839, 119 pages (June 1974)

CODEN: NBTNAE

U.S. GOVERNMENT PRINTING OFFICE
WASHINGTON: 1974

For sale by the Superintendent of Documents, U.S. Government Printing Office, Washington, D.C. 20402
(Order by SD Catalog No. C13.46:839). Price $1.55

Table of Contents

Page

Summary. 1

1. Introduction 3

2. Fire Signatures and Detection Methods. 4
   2.1 Aerosol Signatures. 4
   2.2 Energy Release Signatures 6
   2.3 Gas Signatures. 7

3. Fatality Causal Agents 8
   3.1 Effects of Aerosols 8
   3.2 Effects of Heat 9
   3.3 Effects of Toxic Gases. 9
      3.3.1 Carbon Monoxide 9
      3.3.2 Carbon Dioxide. 10
      3.3.3 Hydrogen Chloride 10
      3.3.4 Other Gases 10
   3.4 Effects of Oxygen Depletion 11
   3.5 Additive and Synergistic Effects. 11

4. Classification of Detectors. 12
   4.1 Geometric Classification. 12
   4.2 Restoration Classification. 12
   4.3 Alarm Contact Circuit Classification. 12

5. Detector Operating Mechanisms. 13
   5.1 Convected Energy Detectors. 13
      5.1.1 Fixed-Temperature Detectors 13
         5.1.1.1 Eutectic Metal Type. 13
         5.1.1.2 Glass Bulb Type. 14
         5.1.1.3 Continuous Line Type 14
         5.1.1.4 Bimetal Type 15
            5.1.1.4.1 Bimetal Strip. 15
            5.1.1.4.2 Snap Disc. 15
      5.1.2 Rate-of-Rise Detectors. 16
         5.1.2.1 Pneumatic Type 16
         5.1.2.2 Thermoelectric Detectors 17
            5.1.2.2.1 Spot Type. 17
   5.2 Aerosol and Gas Detectors 18
      5.2.1 Ion Chamber Type. 18
      5.2.2 Photoelectric Type. 20
         5.2.2.1 Light Attenuation Operation. . .20
         5.2.2.2 Light Scattering Operation . . .22
      5.2.3 Solid State Type. 22
      5.2.4 Resistance-Bridge Type. 23

Page

5.3 Laser Beam Fire Detection. 23
5.3.1 Laser Heat Detection Theory. 24
5.3.2 Laser Smoke Detection Theory 24
5.3.3 Laser Detection Systems. 25
5.3.4 Operational Experience 25
5.4 Radiant Energy Detectors 26
5.4.1 Infrared Type. 26
5.4.2 Ultraviolet Type 28
5.4.3 Combination Ultraviolet-Infrared Type 28
5.5 Submicrometre Particle Counting Detectors. . 28
5.5.1 Particle Ionization Type 28
5.5.2 Condensation Nuclei Type 29
5.6 Fiber Optics in Detectors. 30
5.7 Ultrasonic Detectors 30
5.8 Combination Detectors. 31
5.8.1 Rate-of-Rise Fixed-Temperature Type. . 31
5.8.2 Resistance Bridge - Ion Chamber Type 31

6. Detector Subsystems 32
6.1 Alarm Sounding Devices 32
6.2 Trouble and Supervision Circuits 32

7. Ambient Conditions Affecting Detector Response. . 33
7.1 Background Levels of Fire Signatures 33
7.2 Heating and Air-conditioning Effects 34

8. Reliability of Detection Devices. 36
8.1 Heat Detectors 36
8.2 Light Sources and Photocells 37
8.3 Batteries. 37
8.4 Field Experience 38

9. Maintenance of Detectors. 38

10. Performance Standards and Acceptance Criteria for Detection Devices 38
10.1 U.S. Standards and Acceptance Criteria. . . 39
10.2 Foreign Standards and Acceptance Criteria . 42
10.3 Trends in Standards and Test Criteria . . . 44

11. Field Tests of Detector Performance 45

12. Code Requirements for Fire Detection. 47
12.1 State Requirements. 47
12.2 Local Requirements. 48

Page

12.3 Model Building Code Requirements. 48
12.4 The Life Safety Code Requirements 49
12.5 Mobile Home Requirements. 49
12.6 Federal Housing Administration Requirements. 49

13. Conclusions 50

14. Acknowledgments 51

15. References. 52

16. Bibliography. 60

17. Tables. . . . . .
I. Thermal Particulate Point in Air 78
II. Effect of Carbon Monoxide Exposure 79
III. Effects of Carbon Dioxide Exposure 80
IV. Effects of Oxygen Depletion. 81
V. Ratings of Fixed-Temperature Detectors . . . 82

18. Figures . . . . . .
1 Properties of a Smouldering Cotton Fire. . . 83
2 Influence of Coagulation On Smouldering Wood Smoke 84
3 Particle Size Distribution of Various Types of Smoke 85
4 Line Type Fire Detection Cable 86
5 Line Type Fire Detection Cable Using a Glass Semiconductor. 87
6 Bimetal Strip Heat Detector. 88
7 Bimetal Snap Disc Heat Detector. 89
8 Pneumatic Type Heat Detector 90
9 Ionization of Chamber Air Space. 91
10 Effect of Aerosol in Ionized Chamber 91
11 Unipolar Ion Chamber 92
12 Bipolar Ion Chamber. 92
13 Unipolar and Bipolar Ion Chambers in Series 93
14 Configuration of a Dual Ion Chamber Detector 94
15 Beam Type Light Attenuation Smoke Detector 95
16 Spot Type Light Attenuation Smoke Detector 96
17 Light Scattering Smoke Detectors 97
18 Simple Schematic of Detector Using a Solid State Gas Sensor 98

Page

19 Enlarged Sectional View of a Solid State Gas Sensor. 99
20 Photocell Masking for Heat Detection. 100
21 Corner-Cube Mirror. 101
22 Typical Layout of Laser Detector. 102
23 Heat and Smoke Detection With Laser Beam. . . 103
24 Fresnel Lens System 104
25 Servo-Control of Lens System for Laser Fire Detector. 105
26 Schematic of Servo-Controlled Laser Fire Detector. 106
27 Schematic of Condensation Nuclei Particle Detector. 107
28 Rate-of-Rise - Fixed-Temperature Detector Using a Bimetal Element 108
29 Rate-of-Rise - Fixed-Temperature Detector Using an Eutectic Metal 109
30 Rate-Compensation Detector. 110

List of Symbols and Abreviations

°C	-	Celsions
cm	-	Centimetre
CO	-	Carbon Monoxide
CO_2	-	Carbon Dioxide
°F	-	Fahrenheit
F.M.	-	Factory Mutual Research Corporation
HCl	-	Hydrogen Chloride
HCN	-	Hydrogen Cyanide
HF	-	Hydrogen Fluoride
H_2S	-	Hydrogen Sulfide
H_2O	-	Water
m	-	Metre(s)
N.F.P.A.	-	National Fire Protection Association
NH_3	-	Ammonia
NO_2	-	Nitric Oxide
O_2	-	Oxygen
Obs ft^{-1}	-	Obscuration Per Foot
O.D. m^{-1}	-	Optical Density Per Metre
OH	-	Hydroxyl Ion
ppm	-	Parts Per Million
PVC	-	Polyvinyl Chloride
s	-	Second(s)
SO_2	-	Sulfur Dioxide
U.L.	-	Underwriters Laboratories

Fire Detection: The State-of-the-Art

by R.L.P. Custer and R.G. Bright

The current state-of-the-art in fire detection technology is reviewed considering the nature of fire signatures, detection modes used, test methods, performance requirements and code requirements for fire detection. Present trends in standards development and recommendations for future work are included. An extensive bibliography is provided.

Key Words: Fire detection; fire detection code requirements; fire detector testing and standards; fire detectors; fire signatures.

SUMMARY

The purpose of this work is to provide a review of the data regarding the outputs from the combustion process that might be used to detect the presence of a fire and to discuss existing fire detector technology. The term fire signature is defined as any product of a fire which changes ambient conditions and thus has the potential for use in fire detection.

Fire signatures, causes of fatalities, and the classification of detectors are briefly defined to establish the background for a detailed discussion of detector operating mechanisms. The operating principles of each detector type are discussed in terms of function, threshold of operation and application.

Consideration is also given to such problems as audibility of alarm sounding devices, trouble circuitry, supervision, the effects of ambient conditions on detector operation, and reliability.

A comparison is made of performance standards and acceptance criteria both in the United States and in various foreign countries. This includes a brief discussion of the trends in the areas of testing procedures and acceptance criteria. A brief treatment of the value of and restrictions on the results of field tests is also included.

The expanding body of code requirements pertaining to the use of detectors is reviewed and examples of specific requirements discussed.

It is concluded that with present state-of-the-art hardware, detection of a fire can be achieved within milliseconds of inception. It is therefore possible, though not always cost effective, to provide nearly any response time desired. False alarms, including both equipment failure and signals from background aerosols such as cigarette smoke and cooking fumes, represent a major problem to be overcome. It is suggested that multi-mode detectors with discriminating logic circuits can provide some help in this area. Further work should be encouraged to develop the hardware to detect fire signatures which are not presently being used, such as carbon monoxide. It is also concluded that much work needs to be done to up-grade and standardize the test procedures and performance requirements for detection devices.

A bibliography is provided.

Fire Detection: The State-of-the-Art

by R.L.P. Custer and R.G. Bright

The current state-of-the-art in fire detection technology is reviewed considering the nature of fire signatures, detection modes used, test methods, performance requirements and code requirements for fire detection. Present trends in standards development and recommendations for future work are included. An extensive bibliography is provided.

Key Words: Fire detection; fire detection code requirements; fire detector testing and standards; fire detectors; fire signatures.

SUMMARY

The purpose of this work is to provide a review of the data regarding the outputs from the combustion process that might be used to detect the presence of a fire and to discuss existing fire detector technology. The term fire signature is defined as any product of a fire which changes ambient conditions and thus has the potential for use in fire detection.

Fire signatures, causes of fatalities, and the classification of detectors are briefly defined to establish the background for a detailed discussion of detector operating mechanisms. The operating principles of each detector type are discussed in terms of function, threshold of operation and application.

Consideration is also given to such problems as audibility of alarm sounding devices, trouble circuitry, supervision, the effects of ambient conditions on detector operation, and reliability.

A comparison is made of performance standards and acceptance criteria both in the United States and in various foreign countries. This includes a brief discussion of the trends in the areas of testing procedures and acceptance criteria. A brief treatment of the value of and restrictions on the results of field tests is also included.

The expanding body of code requirements pertaining to the use of detectors is reviewed and examples of specific requirements discussed.

It is concluded that with present state-of-the-art hardware, detection of a fire can be achieved within milliseconds of inception. It is therefore possible, though not always cost effective, to provide nearly any response time desired. False alarms, including both equipment failure and signals from background aerosols such as cigarette smoke and cooking fumes, represent a major problem to be overcome. It is suggested that multi-mode detectors with discriminating logic circuits can provide some help in this area. Further work should be encouraged to develop the hardware to detect fire signatures which are not presently being used, such as carbon monoxide. It is also concluded that much work needs to be done to up-grade and standardize the test procedures and performance requirements for detection devices.

A bibliography is provided.

I. Introduction

Hostile fire is a major drain on our national resources. Although the fire loss figures are conservative due to uncertain and inadequate collection methods, some figures collected by the National Commission on Fire Prevention and Control (1)[1] can be useful in presenting the relative magnitude of the problem. In the U.S. property losses alone were reported to be 2.7 billion dollars in 1972. Nearly 12,000 lives are lost each year with the majority resulting from the effects of smoke and toxic gases before being exposed to the flames. It has also been estimated that of those persons exposed to fire, 300,000 will be injured and survive. Perhaps 50,000 of these survivors will spend 6 weeks to 2 years in hospitals or as out-patients while undergoing treatment and reconstructive surgery. When the costs of burn treatment, productivity loss, insurance operations and fire department operations are added to the direct fire loss figures the total cost of fire approaches 11.4 billion dollars.

Any fire, no matter how large it may become, begins as a small fire. In its earliest stages most fires are innocuous and are easily controlled. The noxious products are minimal and generally confined to the immediate vicinity of the point of origin. The earlier in its history of development that a fire can be detected, the better are the chances of escape for those persons in potential danger and the sooner suppression methods can be brought to bear on the fire.

The purpose of detection is two-fold, it can reduce life loss and it can reduce property loss. Where human lives are at risk, time becomes an important factor. Time is needed to alert the occupants and time is needed for them to reach an area of refuge. Throughout this time period it is essential that an escape route be passable. Where the risk to life is mimimal and property loss reduction is the consideration, longer detection times are often tolerated for the sake of minimizing needless alarms. Often the sprinkler system with its water flow alarm doubles as the detection system. Sprinkler systems as presently used are often slow to respond to smouldering fires--those which produce large quantities of toxic products.

Appropriately selected and properly installed, fire detection devices can have a major effect on losses of life. A study by McGuire and Ruscoe (2) of the circumstances surrounding 342 dwelling fire deaths in Ontario, Canada, indicated that the use of smoke detection could result in a

[1] Numbers in ( ) refer to the list of references beginning on page 52.

could result in a 41 percent saving of life; the use of thermal detectors could save 8 percent.

The purpose of this report is to review data regarding the outputs from the combustion process and the present state-of-the-art in fire detection technology. The work deals with the nature of fire signatures, the operating principles of the detection elements, performance testing and acceptance criteria, and code requirements.

2. Fire Signatures and Detection Methods

From the moment of its initiation, fire produces a variety of changes in the surrounding environment. Any product of a fire which changes the ambient conditions is referred to as a "fire signature" and has the potential for use in detection. The production of smoke for example, will result in a decrease in visibility. Not all fire signatures, however, are practical for detection purposes. To be useful, a fire signature should generate a measurable change in some ambient condition. The magnitude of that change must be greater than the normal background variations for the condition. The magnitude of the change in an ambient condition is the signal from a fire signature, and the background level with its normal variations is referred to as the noise. All other factors being equal, such as hardware costs and detection time with respect to some predefined hazard level, the preferred fire signature will be that which can generate the highest signal to noise ratio in the earliest period of the fire development. The best signatures are those which are associated exclusively with fire in a wide variety of fuels. Fuel-specific signatures, such as the release of hydrogen chloride (HCl) from polyvinyl chloride (PVC) combustion, may be of use in detectors for specialized applications but are of little use for general purpose functions. Individual fire signatures are discussed below and the operational principles of their associated detection mechanisms are discussed in a later section.

2.1 Aerosol Signatures

The process of combustion releases into the atmosphere very large numbers of solid and liquid particles which range in size from 5×10^{-4} micrometres to 10 micrometres. These particles suspended in air are called aerosols. The aerosols resulting from a fire represent two different fire signatures. Those particles which are less than 0.3 micrometres do not scatter light efficiently and thus are classified as invisible. Those which are larger than

0.3 micrometres scatter light and are therefore classified as visible. The invisible aerosol signature is generally referred to as the "products of combustion" and the visible aerosol signature as "smoke". The detectors which respond to these signatures are generally referred to as products of combustion and smoke detectors respectively. The term "products of combustion" has been widely used as described above but can be ambiguous in that aerosols, energy, and gases are, in fact, all products of the combustion process. For purposes of this discussion the terms invisible and visible aerosols will be introduced to insure clarity.

Invisible aerosol is the earliest appearing fire signature noted to date. Heating of materials during the pre-ignition stage of a fire produces submicron particles ranging in size from $5x10^{-4}$ to $1x10^{-3}$ micrometres. These particles are generated at temperatures well below ignition temperatures. The temperature at which sub-micrometre sized particles are generated from materials is defined as the thermal particulate point. Thermal particulate points determined by Van Luik (3) for some common materials are shown in Table I. These invisible aerosols are generated in very large quantities. A 0.098 ounce (2.8 g) sample of bond paper burned in air in a room 7.5 feet (2.28 m) square with an 8.9 foot (2.71 m) ceiling produced a maximum particle concentration of $1.3x10^6$ particles per cubic centimetre ($3.6x10^{10}$ part./ft^3).

As heating of a material progresses toward the ignition temperature, the concentration of invisible aerosol increses to the point where larger particles are formed by coagulation (4). As this process continues, the particle size distribution becomes log normal with the most frequent sizes in the range between 0.1 and 1.0 micrometres. The smaller particles, less than 0.1 micrometers disappear either by coagulation or by evaporation, and the larger particles, greater than 1.0 micrometer, are lost through the processes of sedimentation following Stokes' Law. Aerosols in this size range are remarkably stable (4) and contain particles in both the visible and invisible aerosol signature range. This "ageing" of aerosols has been reported by Van Luik (3) and Scheidweiler (5). The influence of time on the size distribution of aerosols is shown in Figures 1 and 2. The production of visible aerosols can occur prior to ignition and is usually initiated at temperatures several hundred degrees higher than the thermal particulate point (3).

The aerosol size distribution from smouldering and flaming combustion of various materials has been determined by Scheidweiler (5). The results are shown in Figure 3

and it can be seen that in some cases smouldering fires produce more large particles than flaming fires. It is important, however, to note that for both fire types, the maximum relative particle concentration appears to be in the range of particle sizes smaller than 0.3 micrometres. This indicates that invisible aerosol signals can provide early detection in the immediate vicinity of either fire type. The detection modes best suited for the invisible aerosol signature are the condensation nuclei type for the smaller invisible aerosols and the ion chamber type for the larger. Photoelectric units with light sources having a major spectral component in the near ultraviolet and bluegreen wavelengths and a suitable photocell should also respond to the larger invisible aerosols since the best scattering of energy occurs when the particle diameter approaches the wavelength of the incident radiation.

2.2 Energy Release Signatures

Throughout its entire course, fire is constantly releasing energy into the surrounding environment. This energy release produces several useful fire signatures.

The earliest energy signatures detectable with hardware existing at the time of this publication are the infrared (IR) and ultraviolet (UV) signatures. With the exception of acetylene and other highly unsaturated hydrocarbons, the infrared emissions from hydrocarbon are particularly strong in the 4.4 micrometre region due to CO_2 and in the 2.7 micrometre region due to water vapor and account for nearly all the emitted energy (6). Since the infrared component of sunlight, a potential noise or false signal source, is reduced in these regions by absorption due to atmospheric CO_2 and H_2O, a high signal-to-noise ratio is obtained. The CO_2-H_2O radiation signature can be used effectively for detection but there is the possibility of noise from man-made infrared sources. Another signature which affects the infrared signal from a flame is the modulation of the energy output level due to flame flicker (7). This flicker is characteristic of flames and has a frequency range of 1.5 to 15 hertz.

The total infrared signature has been used in the detection of both smouldering and flaming fires but has the disadvantage of having a wide range of noise levels from solar and man-made sources. Detectors using both the CO_2-H_2O and flicker signatures have an excellent signal-to-noise ratio.

The ultraviolet fire signatures appear in flames as emissions from OH, CO_2 and CO in the 0.27 to 0.29 micrometre region (8). Although the signal to noise ratio of the UV signatures, are less than those of the IR signatures, they have been effectively used for flame detection especially where magnesium or its alloys may be involved since burning magnesium has a strong signal in the 0.28 micrometre region (8).

Convected thermal energy from a fire causes an increase in the air temperature of the surrounding environment. The time required for release of sufficient energy to produce a significant convected energy signal varies from less than one minute for rapidly developing fires to hours or even days for slowly developing or smouldering deep seated fires. In comparison to invisible aerosol and radiant energy signatures, the convected thermal energy signatures often appear well after life threatening conditions have been reached from excessive aerosol and/or toxic gas concentrations.

2.3 Gas Signatures

During a fire, many changes occur in the gas content of the atmosphere, not only in the area of fire origin but often in areas far removed from the fire. For the most part these changes consist of the addition to the atmosphere of gases which are not normally present. These changes can be called evolved gas signatures. One change which often takes place is the reduction of oxygen content which can be called the oxygen depletion signature.

Many gases are evolved during a fire. Some examples are H_2O, CO, CO_2, HCl, HCN, HF, H_2S, NH_3 and nitrogen oxides. Most of the evolved gas signatures are fuel-specific and are not associated with a sufficiently large number of fuels to be used for general purpose detection. One gas, carbon monoxide, is present in nearly all fire situations and thus, the CO signature may be of use in fire detection. The rate of CO production varies considerably with the type of fuel, the amount of ventilation and whether the fire is of the smouldering or open flaming type. Work by Bruce (9) showed rapid increases in CO content in room fire tests. The evolution of CO was related to O_2 depletion, and in one test, the concentration of CO rose to over 17 percent in about 7.5 minutes. High concentrations of CO can also be reached in rooms remote from the fire. This was shown by Shorter et al (10). Concentrations of CO in a closed second floor bedroom remote from the fire, reached 1.28 percent in 18 minutes after ignition. The same CO value was reached

at 12 minutes in an open bedroom. The CO signature may have its best application in detection of slow burning and smouldering fires. Data obtained by the Los Angeles Fire Department (11) indicated that CO buildup preceded hazardous temperatures in slow burning fires while the opposite was observed in rapidly burning fires. A complete review of all evolved gas signatures is beyond the scope of this report. For a detailed study, the reader is referred to the work of Ives et al (12). Although CO_2 is also non fuel-specific, the signal-to-noise ratios are generally too low for the effective use of CO_2 as a fire signature due to the presence of ambient CO_2.

3. Fatality Causal Agents

When exposed to the by-products of a fire, the human organism is in a hostile and often fatal environment. The psychological and physiological effects of exposure to these products both individually and in various combinations are discussed below.

3.1 Effects of Aerosols

Aerosols derived from a fire produce several effects on humans. Much of the aerosol consists of carbon particles upon which may be adsorbed a number of irritant compounds such as organic acids, aldehydes or HCl (12). Studies with dogs exposed to kerosene aerosol consisting largely of carbon soot, produced no noticable damage and most of the soot was coughed out within 24 hours (13). This work further indicated that the aldehydes in wood aerosol were the significant factor in causing respiratory tract swelling and irritation. Inhalation of these products makes breathing difficult and may be accompained by severe coughing and a burning sensation in the chest and throat. The eyes generally suffer irritation which makes keeping them open difficult. In addition to the physiological effects, absorption and scattering of light from visible aerosols can reduce visibility to near zero in some cases. These effects combined with fear, anxiety and loss of orientation often result in panic behavior (14). Irrational actions associated with panic have resulted in persons becoming lost, being trapped in dead-end corridors or closets, and in extreme cases merely sitting down and waiting to be overcome. Visible aerosol concentration is measured in terms of percent reduction of light per foot of travel path. For persons familiar with their surroundings, the Japanese (15) set 9.2 percent per foot (0.13 OD/m)* as physiological and psychological tolerance level and for unfamiliar persons 3 percent per foot (0.04 OD/m).

* Optical Density/meter

3.2 Effects of Heat

The most obvious effect on humans of the thermal energy released by a fire is that of the burn injury. This usually occurs when the victim is unable to escape contact with flames or hot gases. Experiments with animals have shown that death occurs after 2 minutes exposure at 212°F (100°C) and at 30 minutes when exposed to 140°F (59°C) (16). Although tests conducted by Dupont (17), using firemen, showed that the subjects' ability to voluntarily endure heat varied from 2 minutes at 300°F (147°C) to 45 seconds at 740°F (389°C), it is likely that these are extreme levels of tolerance. In addition to surface burns, inhalation of heated gases and aerosols often produces thermal damage resulting in sloughing of the trachea lining and hemorrhaging in the respiratory tract (18). Exposure to elevated temperatures may also cause shock due to pooling of blood at the body surface as the body attempts to cool off.

3.3 Effects of Toxic Gases

The toxic gases evolved from a fire are often present in sufficient quantities to produce adverse effects on the human organism. The effects of exposure to individual gases are discussed in the following paragraphs.

3.3.1 Carbon Monoxide

Carbon monoxide is present in nearly all hostile fire situations and is an important factor in losses of life. Zikria et al (13) (19), working with the clinical examination records and autopsy reports of fire victims in New York City, found that CO poisoning rather than respiratory tract damage was the significant factor with victims having post burn survival times less than 12 hours. The threshold limit value for exposure to CO for an 8 hour working day is 50 parts per million (ppm) (20). In fires with conditions of restricted ventilation, CO concentrations of 138,000 ppm have been recorded (21). The physiological effects of exposure to CO are shown in Table II (22). CO acts to reduce the oxygen carrying ability of the blood by combining with hemoglobin to form carboxyhemoglobin. Hemoglobin is the oxygen transporting component of blood. The various effects of CO exposure include, in order of occurence, headache, dizziness, dimness of vision, nausea, increased pulse and breathing rates, confusion and loss of orientation, unconsciousness, reduced pulse and breathing rates, convulsions and, ultimately death. It is clear that exposures to even moderate levels of CO can severely restrict a person's ability to function in a fire

situation especially when combined with the adverse effects of aerosols and elevated temperatures. Work conducted by the Johns Hopkins Applied Physics Lab indicates that, in the 106 fire fatalities studied, 50 percent involved CO poisoning as the cause of death and an additional 30 percent were due to CO poisoning complicated by the effects of coronary disorders and/or the use of alcohol (23-A).

3.3.2 Carbon Dioxide

Carbon dioxide (CO_2) is one of the products of complete combustion and is commonly associated with both flaming and smouldering fires in amounts exceeding the threshold limit value of 5,000 ppm (20). In the bloodstream, CO_2 combines with hemoglobin and acts to stimulate breathing rate. It may also act as an asphyxiant by displacing oxygen. The early symptoms of CO_2 intoxication are dizziness and shortness of breath. This is followed by mental excitement and often maniacal or irrational behavior. Concentrations of 9 percent (90,000 ppm) can be fatal in 4 hours (24) due to CO_2-hemoglobin complexing. Although concentrations up to 6.75 percent (21) have been recorded in bedding test fires, the principle effect of even low concentrations is that of raising the breathing rate which increases the intake of other toxic substances such as CO. The effects of increasing CO_2 concentration are shown in Table III (22).

3.3.3 Hydrogen Chloride

Hydrogen chloride is not found in fires with cellulosic materials but is often associated with the burning of many common plastics such as the vinyls. The threshold limit value is 5 ppm and a noticeable irritation of the mucous membranes occurs at 35 ppm. Concentrations of 1,000 to 2,000 ppm produce severe reactions which may be fatal (25).

3.3.4 Other Gases

Many other gases are evolved from burning materials in small but potentially dangerous quantities. Tests, by Gross et al (26), of both flaming and smouldering combustion of materials used in interior finishings for aircraft produced measurable quantities of toxic gases. These are discussed briefly below. Polyamides and modacrylics produced hydrogen cyanide. Hydrogen sulfide (H_2S) was produced from chloroprene. Sax (28) notes that H_2S is also produced from burning hair, leather, wool and some dyes as well as some synthetic fabric finishes. Polysulfone plastic was found to produce sulfur dioxide (SO_2). Sax notes that SO_2 also can be produced from burning rubber and wood. Gross et al (26) also detected

hydrogen fluoride, nitrogen oxides and ammonia. The gases listed above represent a small percentage of the chemical species present in fire gases. Although usually present only in small sub-lethal quantities these gases can produce additive and synergistic effects within the total system of fire products. These effects will be discussed in a subsequent section.

3.4 Effects of Oxygen Depletion

Although oxygen depletion is usually confined to the immediate area of a fire, its effects can be felt in remote areas of the buildings involved with either a large open burning fire or, if the building is tightly sealed, smouldering fires of long duration. The physiological effects of oxygen depletion are shown in Table IV.

3.5 Additive and Synergistic Effects

When dealing with mixtures of toxic materials, consideration must be given to additive and possible synergistic effects. Lacking specific information, a first approximation of the hazardous condition created by a mixture of toxic substances can be made by assuming that the effects are at least additive (27). The threshold limit of a mixture is exceeded when the following expression exceeds unity:

$$\frac{C}{T} + \frac{C2}{T_2} \quad . \; . \; . \quad \frac{Cn}{Tn}$$

where C is the observed concentration of any component of the mixture and T is the established threshold limit for that component for the exposure time to reach a predefined effect or lack of effect. It is not, however, safe to assume that combined effects are strictly additive. It has been demonstrated that the total effects of mixtures of toxic materials can be much greater than the additive case. This is defined as a synergistic effect. Pryor et al (24) studied the synergistic effects on the mortality of mice. Control groups of 10 animals were exposed for 4 hours to a mixture of 16 percent O_2, 750 ppm CO and 30 percent CO_2 and all survived. The experimental groups were exposed to the same mixture but with added small amounts of NO_2, SO_2 or HCN. It was found, for example, that the addition of 10 ppm HCN to the base mixture resulted in the death of 2 mice during the 4 hour test. A concentration of 150 ppm HCN in air was required to achieve the same mortality rate. Considering the effects of increased breathing rates associated with elevated CO_2 and CO and

decreased O_2 combined with the irritant effects of fire generated aerosols and the possible synergistic effects of small amounts of other toxic gases, it is clear that persons exposed to these conditions can quickly be rendered helpless. Thus, when detection is employed for the purpose of limiting life loss, the use of devices which respond early in the fire history before occupied areas become untenable is clearly indicated.

4. Classification of Detectors

Fire detectors may be classified in several ways. Classification can be made on the basis of placement of functional characteristics of detectors and the operating principle. Classification by placement and functional characteristics as described in this section and classification by operating principle is described in section 5.0.

4.1 Geometric Classification

Detectors may be classed by the geometry of the area they cover. Spot detectors are devices whose detecting element responds to conditions at a single point. A line detector senses conditions along a continuous linear path. Volume detectors are those which monitor conditions within a specified volume and will respond to signals anywhere within that volume.

4.2 Restoration Classification

Detectors may also be classified by the way in which they are placed in service following operation. Restorable detectors are those which can be restored to operative condition following a fire. Those may be either of the self-restoring or the manually restoring type. Nonrestorable detectors have sensing elements which are destroyed by the fire.

4.3 Alarm Contact Circuit Classification

The type of alarm contact circuit can also be used to classify detectors. An open circuit detector has contacts which are normally open and close on alarm while a closed circuit type opens the contacts or breaks a circuit on alarm. A transfer circuit type opens one circuit and closes another when the alarm conditions are reached.

5. Detector Operating Mechanisms

The following is a discussion of the various operating mechanisms presently used to sense the presence of fire signatures.

5.1 Convected Energy Detectors

Heat detectors respond to the convected thermal energy of a fire. They may respond either at a predetermined or fixed temperature or a specified rate of temperature change. In general, heat detectors utilize some physical or electrical change which occurs in a material when exposed to heat.

5.1.1 Fixed-Temperature Detectors

Fixed-temperature detectors are designed to alarm when the temperature of the operating element reaches a specified point The air temperature at the time of operation may be higher than the rated temperature due to the thermal inertia of the operating elements. Fixed temperature heat detectors are available to cover a wide range of operating temperatures. This is necessary so that detection can be provided in areas which are normally subjected to high ambient (non-fire) temperatures. The temperature ratings for heat detectors are listed in Table V.

5.1.1.1 Eutectic Metal Type

Eutectic metals, alloys of bismuth, lead, tin and cadmium which melt rapidly at a predetermined temperature, can be used as operating elements for heat detection. The most common such use is the fusible element in an automatic sprinkler head. Fusing of the element allows water to flow in the system which triggers an alarm by various electrical or mechanical means.

A eutectic metal may be used in one of two ways to actuate an electrical alarm circuit. The simplest method is to place the eutectic element in series with a normally closed circuit. Fusing of the metal opens the circuit which triggers an alarm. The second method employs an eutectic metal as a solder to secure a spring under tension. When the element fuses, the spring action is used to close contacts and sound an alarm. Devices using eutectic metals cannot be restored. Either the device or its operating element must be replaced following operation.

5.1.1.2 Glass Bulb Type

Frangible glass bulbs similar to those used for sprinkler heads have been used to actuate alarm circuits. The bulb, which contains a liquid and a small air bubble, is used as a strut to maintain a normally open switching circuit. When exposed to heat the liquid expands, compressing the air bubble. When the bubble is completely absorbed, there is a rapid increase in pressure, shattering the bulb and allowing the contacts to close. The desired temperature rating is obtained by controlling the size of the air bubble relative to the amount of liquid in the bulb.

5.1.1.3 Continuous Line Type

As an alternative to spot-type fixed temperature detection, various methods of continuous line detection have been developed. One type of line detector uses a pair of steel wires in a normally open circuit. The conductors are insulated from each other by a thermoplastic of known fusing temperature (28). The wires are under tension and held together by a braided sheath to form a single cable assembly (see Figure 4). When the design temperature is reached, the insulation melts, contact is made, and an alarm is generated. Following an alarm, the fused section of the cable can be replaced to restore the system.

A similar alarm device utilizing a semiconductor material and a stainless steel capillary tube (29) has been developed for use where mechanical stability is a factor. The capillary tube contains a coaxial center conductor separated from the tube wall by a temperature sensitive glass semiconductor material (see Figure 5). Under normal conditions, a small current (i.e., below alarm threshold) flows in the circuit. As temperature rises the resistance of the semiconductor decreases allowing more current flow and the resulting voltage drop triggers an alarm. These detectors have been used successfully for detection of fires in aircraft engine cells.

An electrical transmission line device has been suggested for use as a heat detector (30). An electrical pulse is sent along an electrical transmission line. The line terminates with an impedance load which is the same as the characteristic impedance of the line being used. If the line is intact, it will appear to have infinite length and the pulse will not return to the transmission point. If the line is damaged by fire, the resulting discontinunity will reflect the pulse. The time required

for the pulse to return can be used to determine the location of the discontinunity (fire).

5.1.1.4 Bimetal Type

When a sandwich of two metals having different coefficients of thermal expansion is heated, differential expansion causes stresses in the assembly which are resolved by bending or flexing towards the metal having the lower expansion rate. The low expansion metal commonly used is Invar, an alloy of 36 percent nickel and 64 percent iron. Several alloys of manganese-copper-nickel, nickel-chromium-iron or stainless steel may be used for the high expansion component of a bimetal assembly. Bimetals are used for the operating elements of several types of fixed temperature detectors. These detectors are generally of two types, the bimetal strip and the bimetal snap disc. Bimetal detectors actuate when the element is heated and flexing action closes a normally open circuit.

5.1.1.4.1 Bimetal Strip

Devices using bimetal strips place the strip directly in the alarm circuit. As the strip is heated it deforms in the direction of its contact point (see Figure 6). The width of the gap between the contacts determines the operating temperature. The wider the gap, the higher the operating point. One drawback to this type of device is its lack of rapid positive action. The gradual bending of the element as it is heated may result in false alarms from vibration or jarring as the rated temperature is approached (28), for example, during periods of transient high ambient temperatures which are below the alarm point.

5.1.1.4.2 Snap Disc

The operating element of a snap-disc device is a bimetal disc formed into a concave shape in its unstressed condition (see Figure 7). As the disc is heated the stresses developed cause it to reverse curvature and become convex. This provides an instantaneous positive action which allows the alarm contacts to close. The disc itself is not usually part of the electrical circuit. Snap-disc devices are not as sensitive to false or intermittent alarms as the bimetal strips described above.

A different application of the thermal expansion properties of metals is found in the rate compensation detectors which use metals of different thermal expansion rates to compensate for slow changes in temperature while

responding with an alarm for rapid rates of temperature rise and at a fixed maximum temperature as well. For a further discussion of this device, see the section on Combination Rate-of-Rise-Fixed-Temperature Detectors.

All thermal detectors using bimetal or expanding metal elements have the desirable feature of automatic restoration after operation when the ambient temperature drops below the operating point.

5.1.2 Rate-of-Rise Detectors

One effect which a fire has on the surrounding environment is to generate a rapid increase in air temperature in the area above the fire. While fixed temperature heat detectors must wait until the room ceiling temperature reaches at least the designed operating point before sounding the alarm, the rate-of-rise detector will function when the rate of temperature change exceeds approximately 15°F (8.33°C) per minute. Detectors of the rate-of-rise type are designed to compensate either mechanically or electrically for normal changes in ambient temperature which are expected under non-fire conditions. The various types of rate-of-rise heat detectors are discussed below.

5.1.2.1 Pneumatic Type

The expansion of gas when heated in a closed system can be used to generate the mechanical forces needed to operate alarm contacts in a pneumatic fire detection device. A completely closed system presents problems in that false alarms can occur strictly from slow changes in ambient temperature as the pressure exerted on the operating mechanism is related only to the absolute change in temperature, regardless of the rate of temperature change. The pneumatic detectors in use today avoid this problem by venting the pressure which builds up during slow changes in temperature. The vents are sized so that when the temperature changes rapidly, such as in a fire situation, the pressure change exceeds the venting rate and the system is pressurized. These systems are generally sensitive to rates of temperature rise exceeding 15°F (8.33°C) per minute. The pressure is converted to mechanical action by a flexible diaphragm. A generalized schematic of a pneumatic system is shown in Figure 8.

Pneumatic heat detectors are available for both line and spot applications. The line systems consist of metal tubing in a loop configuration attached to the ceiling

of the area to be protected. Except where specifically approved, Underwriters' Laboratories requires that lines of tubing be spaced not more than 30 feet (9.1 m) apart and that no single circuit exceed 1000 feet (304.8 m) in length. Zoning can be achieved by insulating those portions of a circuit which pass through areas from which a signal is not desired.

A pneumatic heat detector is available which will respond both to small changes in the average temperature over a large area and rapid changes in a segment as short as 1/4 inch (0.6 cm) (31). This is accomplished using a sealed metal tube containing granules of a metal hydride which releases hydrogen gas at high temperature with a noble gas (helium) filling the void spaces at a pressure of one atmosphere. When exposed to low heat levels over a complete zone, the noble gas in the interstitial spaces expands closing mechanical contacts in much the same manner as an ordinary pneumatic system. When a small segment reaches a temperature of about 1500°F (807°C), the hydrogen is released rapidly from the metal hydride in sufficient volume to increase the internal pressure and operate the alarm contacts. Unwanted alarms due to small changes in ambient temperature can be controlled by adjustment of the alarm contacts. The system is self-restoring. Once the heat has been removed, the hydrogen gas recombines with the metal granules to form the hydride.

For spot applications and in small areas where line systems might not be able to generate sufficient pressures to actuate the alarm contacts, heat collecting air chambers or rosettes are often used. These units act like a spot type detector head by providing a large volume of air to be expanded at a single location.

The pneumatic principle is also used to close contacts within spot detectors of the rate-of-rise - fixed-temperature type. These devices are discussed below.

5.1.2.2 Thermoelectric Detectors

Various thermoelectric properties of metals have been successfully applied in devices for heat detection. The properties used are the generation of a voltage between bimetallic junctions (thermocouples) at different temperatures and variations in rates of resistivity change with temperature (27).

5.1.2.2.1 Spot Type

Spot type devices which operate in the voltage generating

mode, use two sets of thermocouples. One set is exposed to changes in the atmospheric temperature and the other is not. During periods of rapid temperature change, associated with a fire, the temperature of the exposed set increases faster than the unexposed set and a potential is generated. The voltage increase associated with this potential is used to operate the alarm circuit.

5.2 Aerosol and Gas Detectors

The presence of aerosols and gases produced by a fire can be detected in several ways. Detection of these fire signatures is of great interest due to their adverse effects on the occupants of buildings. The operating elements of these detectors are described below.

5.2.1 Ion Chamber Type

The ion chamber detector reacts both to the visible and the invisible components of the products of combustion. It responds best to particle sizes between 0.01 and 1.0 micrometres (32). The ionization chamber has been used for many years as a laboratory instrument for detecting microscopic particles. Thirty years ago Dr. Ernst Meili, a Swiss physicist, developed an ionization chamber device for the detection of combustible gases in mines (33). The major breakthrough in the field resulted from Dr. Meili's invention of a cold-cathode tube which would amplify the small signal produced by the detection chamber sufficiently to trigger an alarm circuit. This reduced the electronics required and resulted in a practical detector. In most models today, the cold-cathode tube has been replaced with solid state circuitry which further reduces the size and cost.

The basic detection mechanism of an ionization detector consists of an alpha radiation source in a chamber containing positive and negative electrodes. Radiation sources are commonly Americium 241 or Radium 226. The strength of the sources range from 0.05 to 80 microcuries. The alpha radiation in the chamber ionizes the oxygen and nitrogen molecules in the air between the electrodes causing a small current (10^{-11} amps) to flow when voltage is applied (see Figure 9).

When aerosols enter the chamber, they reduce the mobility of the ions reducing the current flow between the electrodes (see Figure 10). The resulting change in the balance of the electronic circuit is used to trigger an alarm at a predetermined level of aerosol in the chamber.

By proper placement of the alpha source, two types of chambers may be produced. These are unipolar and bipolar (32) chambers. A unipolar chamber is created by using a tightly collimated alpha source placed close to the negative electrode thus ionizing only a small part of the chamber space (see Figure 11). With this configuration, most of the positive ions are collected on the cathode leaving a predominance of negative ions flowing through the chamber to the anode. The bipolar chamber has the alpha source centrally located so that the entire chamber space is subject to ionization (see Figure 12). The unipolar chamber is theoretically a unipolar and a bipolar chamber in series (see Figure 13).

The relative merits of the two types of chamber design have been discussed by Johnson (33), who indicated that the unipolar chamber has approximately three times the sensitivity of the bipolar configuration. It has been proposed that this is due to the fact that there is less loss of ion carriers by recombination or neutralization of ions of opposite signs which occurs in the bipolar chamber. This results in a higher signal-to-noise ratio and a stronger alarm signal to the amplifier circuit.

The alarm signal in an ion chamber detector is generated by a voltage shift at the junction between a reference circuit and the sampling chamber. The voltage shift results from a current decrease in the sampling chamber when products of combustion are present. The reference circuit may be either electronic, which compensates for power supply variations and component aging, or a second ion chamber only partially open to the atmosphere (see Figure 14). These circuits are referred to as single chamber and dual chamber, respectively. The dual chamber has an advantage in the reduction of false alarms due to changes in ambient conditions. The reference chamber will tend to compensate for slow changes in temperature and humidity.

It should be noted that some ion chamber detector designs are subject to changes in sensitivity with varying velocity of air entering the sampling chamber. Some designs will loose sensitivity as velocity increases and others will shift sufficiently in the more sensitive direction to trigger a false alarm. Care must be taken to choose the appropriate design for the area to be supervised.

Tests by Putnam and Parker (34) indicate that ion chamber detectors are not suitable for use in applications where high ambient radioactivity levels are to be expected.

The effect of radiation is to reduce the sensitivity. They also indicate that false alarms can be triggered by the presence of ozone.

Ion chamber detectors are available for both industrial and domestic use. Models are produced for both single station and system applications. Power supply requirements vary from 240 and 120 volt AC to battery units using 9 to 13.5 volts DC.

5.2.2 Photoelectric Type

The presence of aerosols generated during the combustion process affects the propagation of light as it passes through the air. Two effects of the aerosol/air mixture can be utilized to detect the presence of a fire. These are attenuation of the light intensity integrated over the beam path length, and scattering of the light both in the forward direction and at various angles to the beam path. Theoretical explanations of these effects can be found in References 34 and 35.

5.2.2.1 Light Attenuation Operation

The theory of light attenuation by aerosols dispersed in a medium is described by the Lambert-Beer Law. It states that the attenuation of light is an exponential function of the beam path length (l), the concentration of particles (c) and the extinction coefficient of the particles (k). This relationship is expressed as follows (35):

$$I = I_o e^{-kcl}$$

where I is the final intensity at length l and I_o is the initial intensity at the light source.

Smoke detectors which utilize attenuation consist of a light source, a collimating lens system, and a photosensitive cell (see Figure 15). In most applications, the light source is an incandescent bulb. Two new light sources are currently being considered for use in photoelectric aerosol detectors. Light emitting diodes (LED's) have the potential for providing a reliable long life source of illumination with low current requirements. Pulsed LED's can generate sufficient light intensity for use in detection equipment. Another promising light source is the solid state injection laser. Using milliwatt or microwatt power sources, these laser chips, less than 1/10 inch (.25 cm) in diameter, could provide long

life light sources. Present problems with cooling, however, limit their use.

The photosensitive device may be either a photocurrent, photovoltaic or photoresistive cell. The photovoltaic cells are usually selenium or silicon cells which produce a voltage when exposed to light. These have the advantage that no bias voltage is needed but, in most cases, the output signal is low and an amplification circuit is required. These units alarm when the photocell output is reduced by attenuation of the light as it passes through the smoke in the atmosphere between the light source and the photocell. Photoresistive cells change resistance as the intensity of the incident light varies. Cadmium sulfide cells are most commonly employed. These cells are often used as one leg of a Wheatstone bridge and an alarm is triggered when the bias voltage shift in the bridge circuit reaches a predetermined level related to the designed light attenuation desired for alarm.

In practice, most light attenuation or projected beam smoke detection systems are used to protect large open areas and are installed with the light source at one end of the area to be protected and the receiver (photocell/relay assembly) at the other end. In some applications, the effective beam path length is increased by the use of mirrors. Projected beam detectors are generally installed close to the ceiling where the earliest detection is possible and false alarms resulting from inadvertent breaking of the beam are minimized.

Although most systems employ a long path length and separation of the light source and the receiver, there are spot type detectors which operate by light attenuation. One such unit, uses a 7.8 inch (0.19 m) light path with a sealed reference chamber and an open sampling chamber (37). Presence of smoke in the sampling chamber results in a voltage reduction from the selenium photocell which is measured by a bridge circuit containing the photocell from the reference chamber (see Figure 16).

There are several problems associated with projected beam detection. Since these devices are essentially line detectors, smoke must travel from the point of generation into the path of the light beam. This may take time and allow the fire to develop headway before the alarm is sounded. In addition, owing to the long path lengths often used, considerable smoke must be generated in order for sufficient attenuation to be achieved. This problem can be reduced somewhat by the use of multiple beams or reflecting mirrors.

Finally, continuous exposure to light can damage or accelerate the aging of photocells, resulting in increased maintenance and possible system failure (38).

5.2.2.2 Light Scattering Operation

Scattering results when light strikes aerosol particles in suspension. Scattered light reaches its maximum intensity of about 45° from the path of the beam in both the forward and backward directions and the intensity is at a minimum in the direction perpendicular to the beam path (38). The intensity of scattered light is also related to particle size and the wavelength of the incident light. This intensity, as described by Rayleigh's (36) (37) theory for particles up to 0.05 times the wavelength of the incident light, is directly proportional to the square of the particle volume and inversely proportional to the fourth power of the wavelength. The theory of scattering for larger particles (0.8 times the wavelength of light) has been defined by Mie. These theories of light scattering are valid only for isotropic spherical particles and are very complex. Aerosol from a fire is a non-homogeneous mixture of particles which are often neither spherical nor isotropic and scattering intensities must be determined empirically for each aerosol mixture. References 34 and 35 contain a good general treatment of scattering theory.

Smoke detectors utilizing the scattering principle operate on the forward scattering of light which occurs when smoke particles enter a normally dark chamber or labyrinth. The presence of smoke will increase the forward scattering of light from 10 to 12 times (38), but the intensity of the scattered light will decrease as the angle between the beam path and the photocell increases. The photocells used in these detectors may be either photovoltaic, photocurrent or photoresistive. Typical component configurations are shown in Figure 17. These units are of the spot type and may be used as single station devices with self-contained power supply and alarm or as part of an integrated system with remote power supply, alarm and zone-indicating hardware.

5.2.3 Solid State Type

A recent entry into the detection field uses a bulk N-type semiconductor composed of metal oxides such as tin oxide, zinc oxide and ferric sesquioxide (39). Originally developed as a gas leak detector, the operating element responds with a large decrease in resistance when exposed to reducing or combustible gases, such as hydrogen, carbon monoxide, methane, propane, alcohol, volatile oil, and

acetylene. In the simplest application the operating element is placed in series with an alarm device and the power source and in the quiescent condition acts as a high resistance to block the flow of current to the alarm circuit (see Figure 18). The detector element must be heated in order to operate. A diagram of the detector element is shown in Figure 19. Units using this type detector element have the advantage of being self-restoring when the alarm conditions are no longer present. Although many detectors which use this sensor are on the market, their value as a fire detector has not been fully established. Potential problems may exist regarding contamination of the sensor and its expected life span. Also, since the sensor responds to a variety of gases which are not fire signatures, false alarms can be a major problem. These units can go into alarm when exposed to furniture polishes, bug sprays, cleaning fluids and a variety of other commonly used items. Detectors using this sensing element are used in spot type applications. This solid state sensor presently is a controversial device and its adequacy as a fire detector has not been completly established.

5.2.4 Resistance-Bridge Type

Detectors using the resistance-bridge principle respond to the invisible aerosol and gaseous products of combustion. The sensing element consists of a high purity glass plate on which is deposited a high resistance grid. When this grid is exposed to products of combustion, the resistance decreases due to adsorption of materials on its surface. This change is used to initiate an alarm. One design uses two resistance grids in a bridge circuit. One grid is exposed to the atmosphere while the other is only partially exposed. In this configuration the partially exposed grid acts to compensate for slow changes in ambient conditions and the bridge remains balanced. Under fire conditions, the resistance of the exposed grid drops faster than the partially exposed grid. The resulting potential in the bridge circuit is used to trigger an alarm. Resistance grid detectors have had difficulty with false alarms from moisture and other airborne contaminants.

5.3 Laser Beam Fire Detection

D.I. Lawson (40) has proposed the use of laser beams passing through a building close to the ceiling as a means of detecting the presence of a fire. The laser detector is used in much the same manner as a collimated incandescent light beam but has several major advantages. The distances over which an incandescent source may be used are restricted due to diffusion of the light beam. The laser consists

of a coherent monochromatic light beam in which all the energy is propagated in phase. This allows the beam to be focused on a point at greatly increased distances (1148 feet [350 m]) (41). Thus the laser beam can respond to fire signals over a larger area. In addition to smoke, the laser system will also respond to heat.

5.3.1 Laser Heat Detection Theory

The laser detects the presence of heat by reaction to changes in the index of refraction of the air along the path of the beam. The refractive index of air varies about one part per million with each rise in temperature of 1.8°F (1.0°C). This change in refractive index can cause variations in the velocity of the laser beam. If the beam from a laser is split optically into two beams which are separated vertically and recombined at a receiver, the vertical variations in refractive index will result in path differences between the two beams. The output of a photocell receiver will vary from a minimum to a maximum with cancelling or reinforcement as the beams recombine. This was investigated by Lawson (46) and it was discovered that the variations from a small fire would result in a fluctuating signal on the order of 8 hertz for this system. This, it was felt, was too low to be discriminated from background noise due to building vibration and other sources. Lawson called this an "Interferometric System".

Variations in the position of a single beam system due to changing index of refraction will also move the spot on the photocell. O'Sullivan, et al (42) investigated the use of a checkered mask over the receiver photocell with the openings approximately the size of the laser spot (Figure 20). Under quiet (non-fire) conditions the spot was assumed to remain over one opening in the mask. Under fire conditions, the spot fluttered and moved across the mask resulting in a fluctuating signal at the receiver output. The frequency of this fluctuation under fire conditions for this system was found to be on the order of 40 to 80 hertz while the ambient flutter frequency ranged from 0 to 20 hertz. Using this approach it is possible to discriminate the fire signal from the background noise.

5.3.2 Laser Smoke Detection Theory

The laser beam responds to the presence of visible products of a fire in the same manner as an ordinary light beam. The presence of particulant in the beam path causes scattering and results in attenuation of the transmitted energy. This is monitored by a photocell. Comparison of the energy

of the received signal with that of the transmitted signal can be used to indicate the presence of smoke (43).

5.3.3 Laser Detection Systems

The state-of-the-art in laser detection systems has been presented by Ghosh (44). The system described is designed to respond to both heat and smoke. The basic system consists of a 1 mW He-Ne laser focused with a telescope on a corner-cube mirror (Figure 21) which returns the beam to the receiver. The corner cube configuration will reflect the beam at 180° regardless of the position of the mirror. This overcomes the vibration and aleignment problems associated with plane mirrors. A typical layout is shown in Figures 22 and 23. The beam returned from the corner-cube mirror passes through an interference filter and a half-silvered mirror. Half of the beam falls on the checkerboard masked photocell to detect heat using an amplifier tuned to 70 hertz and half falls on a photocell system to determine the energy level of the returned beam for comparison with the output of the laser to detect smoke (Figure 23).

To allow for flutter of the beam and still use small photocells, one proposed design uses a modified circular Fresnel lens placed ahead of two small photocells (Figure 24). One photocell is at the focal point of the even numbered strips of the lens and one at the focal point of the odd. Thus the total output of the two photocells is independent of the position of the spot on the lens.

Ghosh also describes a system using servo-control of the position of the spot on a four quadrant photocell as shown in Figures 25 and 26. Glass plates (P_1 and P_2; Figure 25) are placed within the optics of the telescope (L_1 and L_2; Figure 25). These plates are rotated by servo-motors which are controlled by the outputs from each quadrant of the photocell through "difference" amplifiers to maintain alignment of the beam (see Figure 26). The output from the "difference" amplifiers is used to drive another amplifier tuned to 70 hertz. This latter amplifier is used to detect heat when a 70 hertz signal is generated at the quadrant cell. Variations in the spot location on the quadrantcell are fed to a summing amplifier and used to measure attenuation of the beam energy as an indication of the presence of smoke.

A 10 second delay is built into the system to allow for momentary breaks in the beam and other transient signals.

5.3.4 Operational Experience

Although there are no commercially available laser

detection units presently on the market, several pilot installations have been made by the Joint Fire Research Organization in factories, warehouses, cable tunnels and a simulated coal mine gallery (41).

Tests for response to heat and smoke were made with both direct beam (no return mirror) and returned beam devices over path lengths of 246 feet (75 m) to 1148 feet (350 m). Position of fire and smoke sources and ambient wind velocity were varied.

Response to fire in a cable tunnel ranged from 10 to 20 seconds for an 11 inch (28 cm) diameter container of methanol. Smoke in the same tunnel was detected in 25 seconds. In cases where fire or smoke was not detected, high air velocity was thought to be the factor.

Smoke tests in a simulated mine gallery with various velocities and source locations resulted in detection times ranging from 24 seconds at 2 feet per second (0.75 m/s) to 3 minutes and 12 seconds at a velocity of 9 feet per second (2.75 m/s) at the worst location.

In general, the conclusions reached were that detection time is directly related to air velocity, ambient light can have an adverse effect on smoke detection, the laser system is practical as a heat and smoke detector in large buildings, and it will operate effectively in tunnels with the expected air velocities present.

5.4 Radiant Energy Detectors

Several methods can be used to detect fires by sensing the radiant energy from smouldering or flaming combustion. The spectra used are in the infrared and ultraviolet bands. These bands have wavelength ranges of 0.7 to 140 micrometres and 0.001 to 0.4 micrometres respectively.

5.4.1 Infrared Type

Infrared detectors basically consist of a filter and lens system to screen out unwanted wavelengths and focus the incoming energy on a photovoltaic or photoresistive cell sensitive to the infrared. Infrared radiation can be detected by any one of several photocells such as silicon, lead sulfide, indium arsenide and lead selenide. The most commonly used are silcon and lead sulfide. These detectors can respond to either the total IR component of the flame or flame flicker in the frequency range of 1.5 to 10 hertz (45) or 4 to 15 hertz (46).

Interference from solar radiation in the infrared region can be a major problem in the use of infrared detectors receiving total IR radiation in that the solar background can be twice that of a flame signal from a fire of 500 square centimetres. This problem can be partially resolved by choosing filters which exclude all IR but that in the 2.5 to 2.8 micrometre and/or 4.2 to 4.5 micrometre ranges. These represent absorption peaks for solar radiation due to the presence of CO_2 and water in the atmosphere (45). In cases where the detectors are to be used in normally dark applications, such as in vaults (46), this filtering is not necessary. Another approach to the solar interference problem is to employ two detection circuits. One circuit is sensitive to solar radiation in the 0.6 to 1.0 micrometre range and is used to indicate the presence of sunlight. The second circuit is filtered to respond to wavelengths between 2 and 5 micrometres. A signal from the solar sensor circuit can be used to block the output from the fire sensing cell, giving the detection unit the ability to discriminate against false alarms from solar sources. This is often referred to as a "two color" system (45). For most applications, flame flicker sensors are preferred in that the flicker or modulation characteristic of flaming combustion is not a component of either solar or man-made interference sources. This results in an excellent signal-to-noise ratio. These detectors use frequency-sensitive amplifers whose inputs are tuned to respond to an alternating current signal in the flame flicker range (1.5 to 15 hz).

Flame flicker detectors are designed for volume supervision and may use either a fixed or scanning mode. The fixed units continuously observe a conical volume limited by the viewing angle of the lens system and the alarm threshold. The viewing angles range from 15° to 170° for units from various manufacturers. One scanning device has a 400 foot (122 m) range and uses a mirror rotating at 6 revolutions per minute through 360° horizontally with a 100° viewing angle. The mirror stops when a signal is received and alarms after a 15 second delay to screen out transients (46).

Infrared detectors provide volume surveillance by rapidly responding to the designed alarm level anywhere within their range of vision. In addition, they will respond to reflected or reradiated infrared signals originating in areas which might be shielded from direct observation (47). There are also detectors of this type designed to respond to passing sparks or flame fronts in piping (48).

5.4.2 Ultraviolet Type

The ultraviolet component of flame radiation is also used for fire detection. The sensing elements may be solid state such as silicon carbide (49) or aluminum nitride (50), or gas-filled tubes in which the gas is ionized by UV radiation and becomes conductive, thus sounding the alarm (7). The operating range of UV detectors is in the 0.17 to 0.30 micrometre region and in that region they are insensitive to both sunlight and artificial light. The UV detectors are also volume detectors and have viewing angles from 90° or less to 180°.

5.4.3 Combination Ultraviolet-Infrared Type

The combination of UV-IR sensing has been applied to applications in aircraft (51) and hyperbaric chambers (49) fire protection. These devices alarm when there is a predetermined deviation from the prescribed ambient UV-IR balance. The aircraft application (51) uses the UV-IR discrimination for fire warning in conjunction with a continuous wire overheat detector, the analysis being performed by an on-board minicomputer.

5.5 Submicrometre Particle Counting Detectors

During the earliest stages of combustion, in the pyrolysis or precombustion stage, large numbers of submicrometre sized particles are produced. These particles fall largely in the size range between 0.005 and 0.02 micrometres (52). Although ambient conditions normally find such particles in concentrations from several thousand per cubic centimetre in a rural area to several hundred thousand per cubic centimetre in an industrial area, the presence of an incipient fire can raise the submicrometre particle concentration sufficiently above the background levels to be used as a fire signal. In the area of its flame, for example, a match can produce 10^{11} particles per cubic foot (10^7 part/cc) (52). Production of these particles can fill a volume 10^{12} times the volume of the material lost in producing them to a concentration 10 times a normal ambient of 4×10^8 to 2×10^9 particles per cubic foot (2×10^4 to 10^5 part/cm^3) (Van Luik, F.W., Jr., Environment One Corp. Private Communication).

5.5.1 Particle Ionization Type

A devce which determines submicrometre particle concentration by measuring the variation in electrical charge due to the

presence of ionized particles has been described by Hurn (53). Air samples, filtered to remove coarse material, are drawn through a chamber where the submicrometre particles are exposed to a negatively polarised ion field generated by a radioactive source. An ion separator removes the positive primary ions from the field and the remaining negative primary ions are allowed to interact with the particles. The sample passes through a primary ion remover so that only the negatively charged particles (secondary negative ions) continue through the detector. The sample then passes between two concentric polarized tubes where the secondary negative ions (particles) are electrostatically precipitated giving up their charge to the outer tube. This results in a variation in potential across the tubes. Since each particle carries one charge, these variations are directly proportional to changes in particle concentration of the air sample. With a background of 4.2×10^9 particles per cubic foot (1.5×10^5 part/cm^3), it is possible to detect a change of 100 particles. The device is able to detect fires as small as a two-square-inch piece of typing paper or heating of one-half inch of PVC wire insulation to 572°F (300°C).

With an appropriately chosen alarm threshold, devices operating in this mode can be effective fire detectors.

5.5.2 Condensation Nuclei Type

Condensation nuclei are liquid or solid submicrometre (0.001 to 0.1 micrometres) particles which can act as the nucleus for the formation of a water droplet (52). By use of an appropriate technique, submicrometre particles can be made to act as condensation nuclei on a one particle-one droplet basis and the concentration of particles is measured by photoelectric methods. A mechanism for performing this function has been described by Skala (54) and is shown schematically in Figure 27. An air sample is drawn through a humidifier where it is brought to 100 percent relative humidity. The sample then passes to an expansion chamber where the pressure is reduced with a vacuum pump. This causes the relative humidity to rise above 100 percent resulting in condensation of water on the particles. The droplets quickly reach a size where they can scatter light. The dark field optical system in the chamber will allow light to reach the photomultiplier tube only when the water droplets are present to scatter light. The output of the photomultiplier tube is directly proportional to the number of droplets (i.e., the number of condensation nuclei) present.

The system uses a mechnical valve and switching arrangement to allow sampling from up to 4 detection zones with

as many as 10 sampling heads per zone. Each zone is sampled once per second for 15 seconds. All 4 zones are sampled each minute.

The system is nominally set to alarm at concentrations exceeding 2.2×10^{10} particles per cubic foot (8×10^{5} part/cc), although it is possible to select different thresholds for each zone depending on the background noise and the sensitivity required. It is also possible to have the sensitivity vary for different conditions with time of day. The system design is such that with the maximum sample travel distance from the most remote sampling head, fire will be detected within 2 minutes of the time the products of combustion first reach the head.

5.6 Fiber Optics in Detectors

Fiber optics is the science which deals with the transmission of electromagnetic radiation through transparent filaments (55). Fiber optic systems consisting of bundles of oriented fibers have been found to have good transmission characteristics in the visible and the near infrared. Kapany (56) reported transmittance of 50 percent in the visible region over a length of 7 feet (2.4 m) and over 50 percent for oxide glass in the 0.3 to 6.0 micrometre region and 50 percent in the 1.0 to 12.0 micrometre region with an arsenic-sulphur glass. One fire detection system for use with aircraft engine spaces (55) uses the characteristics of flexible fiber optics to transmit IR and visible radiation signals from the potential fire site to the aircraft cockpit. At the receiving end, the signals transmitted by the fiber optics are continuously viewed by a cadmium selenide photoconductive cell. Used in conjunction with a circuit for ultraviolet detection, the system can discriminate fire from overheat conditions. When an alarm is triggered, the observer may make visual confirmation of conditions in the fire area by moving the photocell assembly and viewing the aligned fiber optics through a suitable objective lens system.

5.7 Ultrasonic Detectors

The heat which results from the presence of a fire can be detected using an ultrasonic receiver-oscillator (57) (58). The ultrasonic oscillator sets up a stable standing wave pattern in the area to be supervised. Movement of air in the room, caused by the convection of hot gases from a fire, disturbs the standing wave pattern. This disturbance is monitored by an ultrasonic receiver and is used to trigger an alarm. These systems are a spin-off of intrusion detection technology and would only be applicable when the protected

premises are unoccupied. A problem exists regarding the discrimination of a fire alarm from an intrusion alarm.

5.8 Combination Detectors

Several devices are available which use more than one operating mechanism and will respond to multiple fire signatures with a single unit. The combination detectors may be designed to alarm either from any one of the fire signatures or only when all the signatures are present at predetermined levels.

5.8.1 Rate-of-Rise Fixed-Temperature Type

Several heat detection devices are available which operate on both the rate-of-rise and fixed-temperature principles. The advantage of units such as these is that the rate-of-rise elements will respond quickly to rapidly developing fires while the fixed temperature elements will respond to slowly developing smouldering fires when the design alarm temperature is reached.

The most common type uses a vented hemispherical air chamber and a flexible diaphragm for the rate-of-rise function. The fixed-temperature element may be either a bimetal strip (see Figure 28) or a leaf spring restrained by an eutectic metal (see Figure 29). When the designed operating temperature is reached, either the bimetal strip has flexed to the contact point or the eutectic metal has fused, releasing the spring which closes the contacts.

A second device which can be classified as combination rate-of-rise - fixed-temperature is the rate-compensation detector. This detector uses a metal cylinder containing two metal struts. These struts act as the alarm contacts and are under compression in a normally open position (see Figure 30). The outer shell is made of a material with a high coefficient of thermal expansion, usually aluminum, while the struts, usually copper, have a low coefficient. When exposed to a rapid change in temperature, the shell expands rapidly, relieving the stress on the struts and pulling them closed. Under slowly increasing temperature conditions both the shell and struts expand. The contacts remain open until the cylinder, which expands at a greater rate, has elongated sufficiently to pull them closed. This closure occurs at the device's fixed-temperature rating.

5.8.2 Resistance Bridge - Ion Chamber Type

One method of reducing false alarms with some of the more sensitive types of aerosol detectors, is to combine

operating elements which function in different modes in a gated circuit. An approach has been to use the resistance-bridge concept combined with an ion chamber. Each detection element has its own bridge circuit which triggers one electronic gate. When a fire signal is present from both gates (bridges), the combination detector goes into alarm.

6. Detector Subsystems

In addition to the sensing element, two major items must be included as part of a detection system. These are the alarm devices and the trouble circuitry.

6.1 Alarm Sounding Devices

Once initiated by the detection element, an alarm must be indicated to the occupants of the area concerned. This may be accomplished by means of lights, horns, bells or buzzers. Chimes may be used in special occupancies such as hospitals. The primary alarm mode in most applications is auditory. Present audible devices are required to produce a sound pressure level of at least 85 decibels (dB). This is determined with respect to a reference level which corresponds roughly to the threshold of hearing. Pure tones are not generally used for alarms as they are not as audible as mixed tones of the same intensity. High pitched sounds are undesirable in that they cannot be discriminated as well by the human ear against background noises. In addition the high frequency response of the human ear decreases as the age of the listener increases. It has been suggested (see Section 9) that the requirements for sound level be expressed as dBA. This represents the "A" scale on a sound survey meter which has its frequency response characteristics shaped to account for the frequency response of the human ear.

An important consideration in the use of audible alarms is that of the background noise. Not only its intensity but the range of frequencies represented must be included. In order to be discriminated, an alarm sounding device must produce a noise level higher than that of the background. A difference of 15 dBA over ambient is considered the minimum for waking people from normal sleep (59). In addition, alarm devices which produce noise in the same frequency spectrum as the ambient may not be distinguished though the dB level may be in excess of 15 dBA over the background.

6.2 Trouble and Supervision Circuits

Trouble and supervision elements are included with

detection systems to sound a signal, distinctly different from that of a fire alarm, when a component failure or circuit interruption renders the system or any unit detector inoperative without sounding the fire alarm. An example of this is the trouble circuitry for the incandescent bulb in a light scattering aerosol detector. In a device where the photocell would normally be dark, failure of the bulb would not trigger an alarm, thus the need for supervision. In systems having many spot type detectors which are normally open switches, an end-of-the-line resistor in parallel with the circuit maintains a small supervisory current flow in the system. Breaking the circuit continuity cuts the supervisory current and sounds the trouble alarm. Detectors using battery power supplies have supervision of the battery voltage. When voltage reaches a predetermined level, the alarm sounds intermittantly indicating a trouble condition.

7. Ambient Conditions Affecting Detector Response

Ambient conditions have a strong influence on the choice, placement and response of detectors. Improper choice of detection mode or improper placement can lead to problems ranging from no alarm or delayed alarm, when a fire occurs, to excessive false alarms.

7.1 Background Levels of Fire Signatures

When choosing a detector for a specific location, consideration must be given to the background levels of the signatures to which the detector might be exposed under non-fire conditions. The use, for example, of a UV or IR detector in a location where gas or arc welding is commonplace will generate false alarms. This is not a failure of the detector but rather it is a response to the presence of the signature and signal strength for which the unit was designed. Detectors responding to invisible aerosol fire signatures are especially prone to false signals from such sources as cooking fumes, cigarette smoke and automobile exhaust fumes. A survey of false calls from automatic detection systems in Great Britain (60) revealed an overall ratio of 11:1 false calls to real calls for all types of detection including sprinkler alarms. The same survey showed that ambient conditions such as extraneous heat and smoke, extremes in ambient temperature, moisture (snow, rain and steam) and high velocity air movement were responsible for 25.9 percent of the false calls.

It is not probable that false alarms due to localized and transient changes in the ambient levels of fire signatures can be completely eliminated. However with sufficient

information about ambient variations in different occupancies, the number could be considerably reduced. A program to establish a data base for variations in ambient conditions is presently underway in Great Britain (61). This study will include data on aerosols, temperature, humidity, radiation, air velocity, and vibration. It is possible that raising the threshold of alarm for certain fire signatures in specific occupancies, could reduce the incidence of false alarms without sacrificing the design goal of the installation. Difficulties arising from transient false signals might also be reduced through the use of multiple signature detectors and integration of the signals such that an alarm will sound either at a high threshold of any one signature or a lower threshold with multiple signatures.

7.2 Heating and Air-conditioning Effects

Heating and air-conditioning systems in buildings can exert several effects on the placement and operation of detection devices. These effects result from forced or convected air movement and the development of thermal inversions. Detectors sensing radiant energy signatures are not effected by these factors. Devices responding to the convected energy signatures are only slightly affected since the convected energy of a fire which is sufficiently large to actuate these units, easily overpowers ambient circulation patterns. The most important effects of heating and air-conditioning are on the movement of the products of combustion which make up the aerosol and gas signatures. Detectors sited without regard to air flow and thermal effects may be slow to respond, or in extreme cases may miss the fire signal completely.

Forced hot air systems are widely used in many occupancies. Air flow patterns must be considered in placing detectors and are related to the overall air flow in the building between the supply registers and the cold air return. In a two story dwelling, for example, each room can have its own supply register and the cold air returns may all be on the first floor or in the basement. Under these conditions, cool air descending from above and warm air rising from below creates air currents in the stairwell which move products of combustion to the upper floors. Detectors placed at the top of a stairwell can sense the aerosol and gas signatures originating in the areas below. Air flow up the stairwell is not always uniform. Changes in direction such as that at the ceiling of the second floor can produce a stagnant area where there is little or no movement. Aerosol or gas detectors placed in this area may be slow to respond due to lack of sufficient

air velocity to carry products through the detector housing to the sensing element.

It is not uncommon with forced air systems to find detectors placed too close to the air stream issuing from a supply register with the result that the units are actually being continuously purged when the heating system is in operation. Often detectors are placed in the return air ducts in order to detect aerosol drawn into the system and are used to shut down circulating fans or convert the system to an exhaust mode. Consideration must be given to the effects of dilution of aerosols by air drawn from areas unaffected by the fire. Often intolerable conditions can exist elsewhere in the building long before a strong signal can reach the detector.

Apartment and office buildings often utilize heating systems which serve a single unit. In apartments, the building corridors may serve as a make-up air supply through undercut or louvered doors with exhaust through kitchen and bathroom ventilators. Noxious products of combustion originating in other areas of the building are often drawn into apartments by this means. Detectors placed appropriately in the corridors can be used to sound a general alarm. The air flow to kitchen and bathroom exhausts should be considered when siting detectors within an apartment. In offices where make-up air is drawn from outside the building, corridors often function as a return air plenum. Air flow within rooms in such cases may tend to be toward the corridor doors.

Gravity hot air systems are often found in older buildings. When in use, they depend largely on vertical supply ducts and natural openings between floors for circulation. Usually the air flow patterns are from supply registers at floor level to the ceiling and down natural openings to the lowest level. Lacking the impetus of fans for diffusion of the supply air, the paths of air flow are often restricted leading to "dead" spaces and eddy effects. Detailed siting surveys should be conducted prior to installation of detectors where these systems are used. Hot water/steam radiator systems are also common in older buildings. These systems are gravity dependent and have less effect on the transport of aerosols than forced air systems. Movement will be confined to two general regions: the convection cell developed around the radiator itself, and the vertical circulation from floor to floor by natural openings in the structure. As in the case of gravity hot air, care must be taken to seek out the eddy areas and dead spots and to avoid them. Radiant heating using electric coils in the ceiling is becoming common in certain areas.

The use of radiant heating of the ceiling type can produce a problem. When the system is in operation, a layer of hot gases at the ceiling can prevent the combustion products from reaching ceiling-mounted detectors. In such cases, detectors may have to be wall-mounted perhaps 12 inches below the ceiling (N. Swanson, Security Engineering Co., Inc., Private Communication).

Complete building air-conditioning systems will generate air flow patterns which are, in general, similar to those of the forced hot air system. Two additional problem areas can be found with the use of cooling systems. In the dry areas of the country, air cooling is accomplished using evaporation techniques. Air cooled by this method has a high relative humidity. The effects here are to enhance the agglomeration of smoke particles and trap them in the moist air. The warm dry air rises to the ceiling and a sharp boundary condition is created. Cool moist smoke rising to the ceiling can be trapped at this interface. Unless the air is agitated by a rapidly burning fire, ceiling-mounted detectors, even in the fire area, may not respond to the aerosol signal at all (Pat Phillips, A.E.C. Las Vegas, Private Communication).

Although some specific detector siting information is available in the National Fire Protection Association (N.F.P.A.) Standard 74 (62) and in various manufacturers' application guides, little design data is available to assist in understanding the effects of comfort heating and cooling systems on detector location. Optimization of detector location for heat-on, heat-off and cooling-on, cooling-off conditions should be based on studies of air flow conditions in buildings and existing heating and air conditioning technology.

8. Reliability of Detection Devices

Although detailed reliabiity data are lacking for most detection devices, some general statements can be made regarding certain critical components based on field or laboratory experience and manufacturers' literature.

8.1 Heat Detectors

Heat sensing detectors are generally the most reliable types in terms of component failure since these devices respond directly to the presence of heat by a physical change in the detector operating elements. Heat detectors may fail due to mechanical damage or abuse after installation or by failure of components or circuitry in

peripheral equipment such as power supplies or alarm indicating equipment.

Detection devices for fire signatures other than heat employ electronic circuitry of varying complexity to sense the presence of a fire signature and to monitor the output of the sensing element. The reliability of the device is related to the reliability of its components as they are used in each type of circuit.

8.2 Light Sources and Photocells

The lamps used in photoelectric type smoke detectors are critical to detector operation. The operational lifetime of incandescent bulbs used in photoelectric detectors ranges from about one month to about 37 months (63). Lamp life can be increased by operation at reduced voltages. Lowering the operating voltage reduces filament evaporation, one of the causes of failure. Vibration and shock particularly with fragile, aged filaments often lead to lamp failure. Power surges and power failures are also significant factors. It appears that an average life of 3 years in continuous service can be expected with present bulbs. The problem of bulb life might be solved through the use of light emitting diodes (LED). Manufacturers' data on LED's indicates a possible life span on the order of 10^6 hours approximately 100 years. At this time, barring traumatic damage, the light intensity would be reduced by one half. These light sources are mechanically stable and should be less prone to damage from vibration.

The sensitivity of photocells used in detectors may have a tendency to drift somewhat with aging. The usual method of compensation for such changes is through the use of compensation photocells in various configurations. These cells act as a reference to maintain balance in the circuit.

8.3 Batteries

The use of batteries as the primary power supply for single station detectors has several problems which can effect detector reliability. The present requirements for battery-operated devices call for a 1 year lifetime and an audible trouble signal lasting 7 days when some critical voltage is reached. The type of battery being used can affect the operation of the detector. Alkaline batteries have a constantly decreasing voltage curve as they wear out. Detectors using these batteries require periodic sensitivity readjustment to maintain the designed alarm threshold. Failure of a home owner to readjust the

detector could result in delayed detection or render the unit inoperative. Mercury batteries have a constant voltage throughout most of their life and can be used to control the sensitivity-drift problem. At the end of their life however, mercury batteries undergo a rapid drop in voltage. This will present two problems. First, the sensitivity will decline rapidly and second, it is possible that the reduced power available may shorten the operating time of the alarm horn or, in some cases, prevent its operation.

8.4 Field Experience

Some field experience is available which is of interest. Several instances have been reported of power transformer failures in 110 VAC operated detectors. These failures have, in some instances, resulted in an alarm when the smoke from the failing transformer was detected. It is not known whether these failures have initiated a fire, but the possibility should not be overlooked. Failures of solid state components have also occurred due to electrical transients which have overpowered the built-in transient protection.

9. Maintenance of Detectors

Maintenance problems also affect detector reliability particularly in photoelectric and ionization types. Accumulations of dust and films on the bulbs, lenses and photocells will reduce the intensity of light within the detection element. The effect of this varies with the type of detector. Projected beam type photoelectric detectors will become more sensitive with contamination increasing the possibility of false alarms. Light scattering detectors, on the other hand, will become less sensitive as light intensity is decreased. Ionization detectors are also effected by contamination. Deposition of dust and films inside the ion chamber will decrease the current flow across the chamber and raise the sensitivity. This can result in an increase in the false alarm rate. Collections of dust, particles of lint and other large airborne contaminants can often be trapped in the protective screens or light shields of smoke detectors. This can block smoke entry and prevent or delay an alarm. Proper cleaning and maintenance is important to retain the designed operating characteristics of these detectors.

10. Performance Standards and Acceptance Criteria for Detection Devices

Definitive performance standards and acceptance criteria are not currently available for all types of detection

devices. Work is presently underway by national and international standards groups to define required performance levels and develop appropriate test methods. The existing standards will be discussed in the following paragraphs and comparisons will be made where appropriate.

10.1 U.S. Standards and Acceptance Criteria

Testing of detection devices for approval is presently being carried out in the United States by two organizations; the Underwriters' Laboratories, Inc. (U.L.) and the Factory Mutual Research Corp. (F.M.). Each organization publishes a list of approved or listed devices.

U.L. presently tests detection devices in 3 ways, by conformance to published standards, by conformance to non-published internal or interim methods, or by verification of manufacturers' claims about the capabilities of their devices. The actual test series to which a device is subjected may include one or all of the above approaches. Although U.L. has several standards covering the peripheral hardware associated with detector power supplies, alarm devices and other equipment only two, U.L. 168-1971 (64) and U.L. 521-1971 (65), apply to the performance of the detection element itself.

U.L. 168-1971 applies to the testing of photoelectric type detectors. Beam type detectors are required to alarm in the presence of visible gray aerosol at the following levels indicated in percent obscuration per linear foot of beam length:*

Total Length of Beam (ft)	(m)	Obscuration (percent ft^{-1})	(O.D. m^{-1})**
22	(6.71)	2.0	(0.029)
22-44	(6.71-13.4)	not more than 36.0 for total beam	(0.513)
44	(13.4)	1.0	(0.014)

---

* No alarm is to be sounded for obscuration of 4 percent ft^{-1} (0.057 O.D. m^{-1}) over the entire beam length [i.e., 0.4 percent ft^{-1} (0.006 O.D. m^{-1}) for a 10 ft. (3.05 m) length].

** O.D. m^{-1} is optical density per metre.

Spot type photoelectric units must alarm at an obscuration between 0.4 and 4 percent ft^{-1} (0.006 and 0.057 O.D. m^{-1}). Spot type units are tested for sensitivity and normal operation in a box containing an air circulation system (see Section 10.3) and a smoke density meter. Smoke is generated by smouldering cotton lamp wick within the box and the obscuration level recorded at the moment of alarm. In order to consider differences in response to gray and black aerosol, this standard requires that listed photoelectric detectors respond to black aerosol before the obscuration reaches 10 percent ft^{-1} (0.143 O.D. m^{-1}).

In order to evaluate the unit's reliability when exposed to various deleterious conditions, sample units are tested for response after exposure to high humidity [85 percent at 86°F (29.7°C)], temperature extremes (32°F - 120°F) (0°C - 48.4°C), corrosive atmospheres (CO_2/SO_2, H_2S and salt spray), application of paint, and extremes of supply voltage (85 percent and 110 percent of nominal). Sensitivity following those tests must be within 50 percent of normal. Units are also subjected to a jarring test for mechanical stability.

U.L. 168 also requires the electrical supervision of circuits or components which will render the unit inoperative when they fail (e.g., tube or bulb filaments, interlocks, etc.). Failure of supervised elements must actuate a trouble signal which is separate and distinct from the fire alarm signal. Failure of non-supervised components must result in alarm or have no appreciable effect on detector operation. The electrical circuitry and any switch or relay contacts are tested for failure under current and voltage overloads and switching components are tested for endurance through 6000 cycles of operation.

Heat detectors must meet the requirements of U.L. 521, Fire Detection Thermostats-1971 (65). This standard is used for approval of fixed-temperature, rate-of-rise, and rate compensation detectors of both spot and line type. The performance requirements are similar to U.L. 168 with respect to corrosion, temperature, humidity, vibration and overload tests.

The designed fixed-temperature ratings are verified in an oil or water bath and an air oven test by raising the temperature at 1°F (.55°C) per minute from a temperature below the designed operating point until the alarm point is reached. Uniformity of response must be between 5 and 8 percent of nominal depending on the desired rating.

Rate-of-rise types must not alarm when exposed to rates of 12°F (6.6°C) per minute or less up to 135°F (56.60°C) but must alarm at a rate of 15°F (8.33°C) per minute.

Sensitivity to fire exposure is expressed in terms of spacing limitations under standard test fire conditions such that an alarm is sounded within two minutes following ignition or prior to the operation of standard 160°F (70.4°C) automatic sprinkler heads on 10 foot (3.05 m) spacing. Ratings for 10, 12.5 and 15 foot (3.05, 3.81 and 4.57 m) spacings can be achieved in an air oven test with the temperature change programmed to simulate the actual full scale fire tests. For larger spacing, the full scale test must be run.

Factory Mutual Research Corporation (F.M.) also has two published standards pertaining to detection devices, Class No. 3230-3250, "Smoke Actuated Detectors for Automatic Fire Alarm Signaling" (66) and Class No. 3210, "Thermostats for Fire Detection" (67). These standards are similar to their U.L. counterparts with some notable exceptions. Both contain considerably less detailed information concerning the tests such as corrosion, vibration and electrical overload endurance.

Class No. 3230-3250 deals with all types of "smoke" detectors while U.L. 168 applies only to photoelectric types. While the minimum sensitivity in terms of an obscuration of 4 percent ft^{-1} (13.12 percent m^{-1}) (0.17 O.D. m^{-1}) is the same, there is no required maximum limit on sensitivity. It is felt that for certain applications, such as cleanrooms, very high sensitivity would be desirable. F.M. also tests "smoke" detectors for adverse effects of high velocity air flow, an important factor in duct supervision applications and with certain designs of ion chamber detectors.

F.M. Class No. 3210 maintains closer tolerances than U.L. 521 on the ratings of fixed temperature detectors, allowing only a 3 percent variation from the nominal figure. Rate-of-rise detectors must respond to changes between 15°F (8.33°C) and 25°F (13.75°C) per minute for F.M. approval while U.L. 521 requires 15°F (8.33°C) per minute. Factory Mutual detector spacing requirements are obtained in the same manner as U.L. 521 with the exception that the temperature rating of the sprinkler head used is comparable to that of the thermal detection unit being tested. U.L. tests only with heads rated at 160°F (70.4°C) even though the detector may be rated at 135°F (56.7°C).

As is the case with U.L., F.M. depends, in addition to their published documents, on internal standards and verification that the product meets the intent of its design. In both F.M. standards it is stated that for household warning use, not all requirements of their standards need be met, but approved units must have comparable sensitivity and reliability and meet the requirements of N.F.P.A. 74-1972 (62).

N.F.P.A. Standard 74-1972, "Household Fire Warning Equipment," combines information dealing with acceptance, performance and installation. The basic requirement for acceptance is that all equipment be "approved". This standard has the only performance requirements pertaining to batteries as a primary power source. Batteries for use in detectors must provide a one year life including normal operation and any periodic testing. A "low battery" trouble signal sounding at intervals of one minute or less for seven days is also required. Batteries used for secondary or back-up functions must assure 24 hour operation following a power failure and failure of power followed by restoration must not sound an alarm. This standard also requires that an alarm sounding device produce at least 85 decibels at a distance of 10 feet (3.04 m).

The Department of Housing and Urban Development, in the Guide Criteria for Operation BREAKTHROUGH, has published acceptance criteria for self-contained (single station) combustion products detectors of both the photoelectric and ion chamber types (68). Acceptable detectors are required to alarm at an optical density of 0.01 per foot [2 percent ft^{-1} obscuration (0.029 O.D. m^{-1})]. The alarm sounding device must have a loudness level of 85 dBA $\pm$ 5 dBA at 5 feet (1.52 m). Data should be submitted by the manufacturer to indicate the stability of detection over a one year period and a reliability analysis to predict the expected life of the units. All units should meet the intent of U.L. 168-1969 where applicable.

10.2 Foreign Standards and Acceptance Criteria

For purposes of comparison, representative examples of foreign detection standards will be briefly discussed. Primary consideration is given to the performance aspects of standards from Britain (69), France (70), Australia (71), New Zealand (72) and Japan (15) (73).

The British Standard (BS 3116, Part I) for spot type heat detectors uses an air oven to test the response to varying rates of temperature change. No discrimination

is made in the rating tests between the fixed temperature and the rate-of-rise types. Approved detectors are assigned to one of three groups based on a test-generated response curve relating response time to rate-of-air-temperature rise. All the detectors in a given group will have similar response characteristics to a given set of thermal conditions. The groups are designated as Group 1, Group 2 and Group 3 in order of decreasing sensitivity. This allows the engineer to choose a detector with the desired response time for a given set of expected fire conditions. None of the detectors are subjected to an actual fire test. The section of BS 3116 pertaining to smoke detection is presently under development and the proposed requirements will be discussed in a later section.

Heat detectors in France are subjected to the operating temperature tests as described in BS 3116-1959. Rate-of-rise detectors must not be subject to alarms at a rate-of-rise of 12°F (7°C) per minute. The sensitivity of ionization detectors is tested using the BS 3116 air oven with the circulation velocity reduced to 49.2 feet per minute (0.25 m/s) (see Section 10.3). A dry flat sheet of pure cellulose weighing 0.06 ounce (2 g) is placed on a hot plate as the aerosol source. Detection must be achieved before the sample is destroyed (usually less than 1 minute). The test is repeated with progressively smaller samples until the limit of sensitivity is reached. The French standard does not cover photoelectric or other detection modes.

The performance test used in the Australian Standard, AS A122-1968, evaluates heat-actuated detectors under three rates of temperature rise, 40°F (22°C), 4°F (2.2°C) and 1°F (0.55°C) per minute. Detectors are classed as either normal temperature, those operating between 135°F and 190°F (56.7°C and 86.9°C), or high temperature operating between 190°F and 270°F (86.9°C and 130.9°C). All heat detectors must operate within 2.5 minutes when exposed to a rate-of-rise of 40°F (22°C) per minute.

Fixed temperature detectors tested by New Zealand Standard NZSS 2139:1967, are tested both in a liquid bath and an air oven. In the liquid bath, the detector must not alarm during 7 days exposure to a temperature 10°F (5.5°C) below its design operating temperature, and at its design temperature the heat detector must operate in 60 seconds or less. Air oven exposure at a rate-of-rise of 10°F (5.5°C) per minute must cause an alarm within 3 minutes of reaching the designed operating temperature.

The Japanese testing procedures have been discussed by Watanabe (15). Operational tests of heat detectors are carried out in a circulating air oven. The response time is tested as a function of exposure to a heated air stream having a designated velocity and temperature as well as at a constant rate of temperature rise under natural convection (73). For example, a rate-of-rise spot-type detector of Class 1 rating, must respond in 30 seconds to a heated air stream with a velocity of 83.8 feet per minute (70 cm/sec) and a temperature of 36°F (20°C) above room temperature. It must also operate in 4.5 minutes with a constant rate of temperature rise under natural conditions of 18°F (10°C) per minute. The threshold of non-operation is expressed in a similar manner.

The Japanese test method for aerosol detectors of the ionization and photoelectric types uses a modified Aachen chamber (15). The aerosol source is pyrolyzing filter paper. The aerosol density is measured using percent obscuration per foot for photoelectric types and using a combustion products meter for ion chamber units. The aerosol is circulated through the chamber to assure a homogenous mix. A typical Class 1, nondelay type, photoelectric unit must respond in 30 seconds to 2.3 percent obscuration per foot [7.5 percent m^{-1} (0.033 O.D. m^{-1})] at 120 feet per minute (60 cm sec^{-1}) (see Section 10.3) and no alarm in 5 minutes at 0.76 percent per foot [2.5 percent m^{-1} (0.011 O.D. m^{-1})] at the above air flow velocity. The response sensitivity of ion chamber units is measured against a combustion gas measuring instrument or a parallel plate ionization chamber. Aerosol detection units are approved as Class 1, Class 2 or Class 3 in order of decreasing sensitivity. Full scale fire tests of detectors, although considered beneficial are not used in Japan due to problems of reproducibility.

10.3 Trends in Standards and Test Criteria

At the present time many testing agencies and standards authorities are in the process of developing new test methods and criteria and revising those which are outdated.

In the United States, Underwriters' Laboratories, Inc. is presently developing standards for ion chamber detectors and electrically operated single station fire alarm devices. The present tread with U.L. is to combine separate test standards into a single standard.

Work is being conducted at the National Bureau of Standards to study the behavior of smoke detectors exposed to various types of smoke, rates of smoke production, and

rates of smoke movement. Part of the NBS program is directed toward the development of an interim set of performance standards based on these variables. It has been determined by the authors that testing aerosol detectors under high velocity conditions in test chambers can result in acceptance of units which will be slow to alarm or perhaps not alarm at all under actual fire conditions. This is a serious problem in applications where only one detector might be used as, for example, in a single family dwelling. This so called smoke entry problem relates more to the detector housing design than to the sensing element itself. Proper evaluation of an aerosol detector should then include testing for response to the designed aerosol signature level at a variety of air flow velocities extending at least to a low velocity of 15 feet per minute (0.76 m s^{-1}).

The trends in foreign standards for detection devices are similar to those in the United States. An attempt is underway to develop a set of uniform standards throughout Europe. The thermal detector standards will most likely follow BS 3116. Smoke detection standards are in a state of flux. The test scheme proposed by the Technical University at Aachen (74) suggests an application test where detectors are installed in a room and exposed to a wide variety of fires. The report of testing for a particular detector then would indicate for which risks it could properly be used. Included in the Aachen scheme is a "blinding" test which is being developed to evaluate the effects of bright lights on photoelectric detectors. Hosemann (75) suggests that before supraregional or truly international tests can have meaning, a standard ionization test chamber, a standard obscuration (beam type) test instrument and a standard light scattering instrument must be developed. These instruments would be used to evaluate the performance of different detectors with the same detection mode exposed to the same smoke. Hosemann also suggests the development of a uniform test aerosol for use with these instruments.

It would appear from the present trends in detection standards development that future acceptance criteria will be based on detector performance under a wide variety of fire and smoke conditions. If this trend continues, it will facilitate the choice of the appropriate device for any expected fire situation.

11. Field Tests of Detector Performance

Many field tests and full scale laboratory tests have been conducted with fire detectors (76) (77) (78) (79) (80) (81). The results of these tests can give valuable

information regarding the relative response characteristics of different detectors under varying fire conditions. It should be noted, however, that the performance of a detector in one set of conditions can be vastly different from that of the same detector under different conditions. In addition, wide variations in response time can be noted with different brands of smoke detectors operating on the same principle under conditions of slowly moving smoke. This is primarily related to cabinet design and may not be noticed in tests if the velocity of the moving smoke is greater than 20 to 25 feet per minute (6.09 to 7.62m min^{-1}). The factors which effect the response of detection devices are many. Some examples are rate of fire growth, volume of the fire area, type of fuel, distance of detector from the fire and the air velocity and flow patterns in the building. The results of detector tests should be evaluated only in terms of the specific detection hardware used, the nature of the fire exposure, the arrangement of the detectors and the configuration of the test facility. .

Although the results of any one test series cannot establish all the properties of detection devices or establish a fixed order of preference among detector types, a broad review of the results can generate some general statements. Probably the fastest detection devices for open-burning fires are the radiant energy detectors. Tests in hyperbaric chambers (82) (83) indicated that detection could be achieved with times between 20 milliseconds and 18 seconds. Tests of thermal and smoke detection in a dwelling fire (76) showed that, with a smouldering upholstery fire, rate-of-rise and 135°F (56.6°C) fixed-temperature detectors respond at approximately the same time (118-119 minutes). The temperature at the time of alarm was 140°F (59.4°C). A similar test was conducted with 2 photoelectric detectors included. Alarm was received from the photoelectric unit in the fire room at 38 minutes. This test terminated at 50 minutes with no alarm from the thermal detectors. Another test in this series used a rapidly developing fire in a trash barrel in the test room. This time the rate-of-rise detector alarmed at 2 minutes, while the 135°F (56.6°C) fixed-temperature unit responded at 5 minutes and the photoelectric detector in 8 minutes. Based on these and other tests, it appears that rate-of-rise detection is the fastest means for thermal detection of rapidly growing fires. In another test using an upholstery fire in the living room of the test building, the photoelectric detector in the dining room, separated by the hall and a stairway alarmed in 33 minutes (the photoelectric in the fire room actuated in 21 minutes) while the rate-of-rise unit in

the fire room responded in 1 hour and 40 minutes. Here the advantage of smoke detection in a smouldering fire is obvious.

Comparisons of response time between photoelectric and ion chamber detectors will vary depending on the location of the detectors with respect to the fire and the nature of the fuel. At close range, the ion chamber will alarm ahead of the photoelectric while at some distance away the photoelectric unit will be faster. This is due to the increase in particle size of the aerosol due to coagulation as it ages with time and distance from the fire (77). The ion chamber is more sensitive to the small particles found close to the fire while the photoelectric detector responds faster to the larger more stable particles at a distance.

Little test data are available for full scale tests of detectors such as the laser, the submicron particle counters and the ultra-sonic detectors. These types are, in most situations, faster in response to fire than thermal detection.

Before choosing a particular detection device it is advisable to determine the type of fire expected and the response time needed. Following this, a survey of the test results with similar exposures can be of great assistance in choosing the appropriate detector.

12. Code Requirements for Fire Detection

In past years building and fire codes made little or no mention of requirements for fire detection in buildings. The chief concern centered around evacuation alarms activated by manual pull stations. Recently code officials at the local and state levels, as well as the model code authorities, have begun requiring detection in various types of occupancies, notably multi-family residential. The extent of this move to require detection is so great that a detailed treatment and analysis of all requirements is beyond the scope of this work. However, the trends can be noted by discussing some selected examples.

12.1 State Requirements

At the state level, several states are requiring smoke detection. Ohio requires smoke detection in industrialized (modular or factory produced) One, Two and Three Family Dwellings (86). Detectors are to be placed in the vicinity of, but outside, all sleeping rooms. Detectors may be of any type except thermal-only. The State of Nevada has

similar requirements but requires ionization detectors specifically. In addition to residential requirements, proposed changes to the state code of Ohio would alter some fire resistance requirements for buildings which have either an automatic sprinkler system or an approved air pressurization and smoke detection system. These proposed amendments would require the use of smoke detection in conjunction with air pressurization in hospitals, nursing homes and rest homes.

12.2 Local Requirements

Many cities and local jurisdictions are requiring smoke and/or heat detection. The city of Acton, Mass., for example, requires heat detection in multiple family dwellings of more than 6 units or boarding and rooming houses with more than 10 occupants. Heat detectors are required in utility rooms, heating rooms and similar service areas. In addition, all new single family dwellings and multiple dwellings of six or less units must have smoke and heat detection devices (84). Many cities are also requiring smoke detection in dwelling units of apartment buildings. The city of Dallas, Texas requires the use of approved detectors of products of combustion other than heat in each dwelling unit in apartment buildings (85).

12.3 Model Building Code Requirements

The model building codes which are adopted by many local jurisdictions are also generating detection requirements. The BOCA (Building Officials Conference of America) Basic Building Code (86), for example, now requires a minimum of one smoke detector for visible or invisible particles in each new dwelling unit of the multi-family and one and two family types. The Uniform Building Code (UBC) (87) requires detection of products of combustion other than heat in each dwelling unit of an apartment house as well as in detached dwellings. UBC also allows the use of heat or smoke detectors to initiate the return of elevators to the main floor. Detectors are required in elevator lobbies to prevent elevator doors from opening when untenable conditions exist. Smoke detectors are also required by UBC in air handling systems in the main supply duct to shut down the system when smoke is present.

UBC has adopted UL-168 (Smoke Detectors, Photoelectric Type) and is considering the use of HUD's performance criteria for smoke detectors. The HUD requirements would apply to detection for dwellings.

These are examples of detection requirements presently adopted by 2 model building codes. Other model codes are presently in the process of developing detection requirements, and it is likely that all model codes will soon have new or expanded requirements.

12.4 The Life Safety Code Requirements

The Life Safety Code (N.F.P.A. 101) (62) is widely adopted throughout the United States and Canada. The 1973 changes to this code contain greatly expanded detection requirements and will have substantial impact. An automatic detection system which responds to products of combustion other than heat is required in all corridors of new hospitals, nursing homes and residential custodial care facilities except on sleeping room floors where each sleeping room has detection and detectors are provided at corridor smoke partitions. A complete automatic fire detection system can substitute for a manual alarm system where required in residential, business and mercantile occupancies. New sections have been added to Chapter 9 (Education Occupancies) to cover various types of child day care facilities. Detectors responding to products of combustion other than heat are required in instances where sleeping facilities are present except in fully sprinkled child day care centers. An interim amendment covering detection in One and Two Family Dwellings is included in the 1973 edition of NFPA No. 101. The use of single station type detection units is allowed for the dwelling and child care requirements.

12.5 Mobile Home Requirements

The revisions to NFPA 501B-1973 (Mobile Homes) require that at least one listed smoke detector, which may be single station, be installed in each mobile home outside each sleeping area (88).

12.6 Federal Housing Administration Requirements

The Federal Housing Administration (FHA) has proposed revisions to the Minimum Property Standards (MPS) for Multi-Family (89), Housing for the Elderly and Handicapped (90) and Nursing Homes (91) which would require smoke detection in all "elevator buildings" (5 or more stories). In multi-family housing, the detectors would be in the living units, at fire doors in the fire wall, and in elevator lobbies. The elevator would bypass a floor on which the lobby detector has operated. In non-elevator buildings at least 1 smoke detector would be placed in each living unit. Smoke detection requirements in Housing for the Elderly and Handicapped and

Nursing Homes are similar to Multi-Family except that patient room doors left open would close automatically on activation of a detector within the room. The FHA requirements are not presently in effect but will be in the near future. FHA contemplates extension of smoke detection requirements to One and Two Family Dwellings one year after the revision of the MPS's for Multi-Family and Care-Type Housing.

13. Conclusions

With the present state-of-the-art detection technology, fire detection can be achieved within milliseconds of inception. Thus it is possible, though not always cost effective, to provide nearly any level of response time desired. It is also clear that the widespread use of detection can significantly reduce both life loss and property loss.

Several areas of the detection picture, however, need improvement in order to provide data which will allow effective engineering judgements to be made in selecting the appropriate detector for specific applications.

In the area of false alarms, a problem associated particularly with smoke detection, the proposed work on the nature and variability of ambient levels of fire signatures can provide the necessary data to design detectors such that false or unwanted signals will be minimized. One promising approach may be through the use of multi-mode detectors requiring signals from several fire signatures before a fire alarm is initiated.

Changes need to be made in the testing and approval procedures to provide engineering data for approved detectors. Data should be provided which accurately describe the performance of approved units over a wide range of smoke sources, air velocities, rates of heat evolution, and installation configurations. These data can permit better engineering of detection systems with respect to the expected fire exposure and response time criteria. By limiting approval testing to a narrow range of fire signatures, ambient conditions and installation configurations, or testing against a standard device such as an automatic sprinkler head, many detectors which have desirable characteristics for specific applications may be excluded from the market place while others which may have undesirable properties, such as insensitivity to certain fire signatures, may be accepted. This can result in detector failures due to lack of engineering data concerning the capabilities of a listed or approved unit.

In conjunction with the development of expanded test procedures, work should be done to establish threshold hazard values for determination of appropriate alarm levels of fire signatures. This is important where life safety is the prime consideration. This is particularly significant with regard to aerosol and gas signatures and for the development of threshold requirements for multi-signature detectors.

Also there is a need to continue to investigate methods of sensing additional fire signatures. Carbon monoxide, carbon dioxide and oxygen depletion signatures may be of value in multi-mode detectors. In addition, it is possible that spin-offs from air pollution detection and laboratory analysis technology can be transferred completely or in part to advance the technology of fire detection.

14. Acknowledgments

The authors greatfully acknowledge the assistance of Ms. Nora Jason and the staff of the Fire Information Reference Services of the National Bureau of Standards for their invaluable aid in the procurement and compilation of the reference and bibliographic materials.

15. References

1. National Commission on Fire Prevention and Control, America Burning. U.S. Government Printing Office, Washington, D.C. (1973).

2. McGuire, J.H. and Ruscoe, B.E., The Value of a Fire Detector in the Home. Division of Building Research, National Research Council of Canada, Ottawa, Fire Study No. 9 (1962).

3. Van Luik, Jr., F.W., Characteristics of Invisible Particles Generated by Pre Combustion and Combustion. 77th Annual Meeting of the National Fire Protection Association, St. Louis, Mo. (May 17, 1973).

4. Rodebush, W.H., General Properties of Aerosols. Chapter 4, Handbook on Aerosols, U.S. Atomic Energy Commission (1950).

5. Scheidweiler, A., New Research in Fire Detection Technology. International Symposium (1968).

6. Comeford, J.J., The Spectral Distribution of Radiant Energy of a Gas-Fired Radiant Panel and Some Diffusion Flames. Combustion and Flame, Vol. 18, 125-132 (1972).

7. Wagner, J.P., A Survey of the Principal Operational Characteristics of Fire Detector Mechanisms. Fire Research Abstracts and Review, Vol. 13, No. 2, 95-113 (1971).

8. Maurodineanu, R. and Boiteux, H., Flame Spectroscopy. John Wiley and Sons, Inc., New York (1965).

9. Bruce, H.D., Experimental Dwelling Room Fires. Forest Products Laboratory, Madison, Wis., Report No. 1941 (1953).

10. Shorter, G.W., McGuire, J.H., Hutchinson, N.B., and Legget, R.F., The St. Lawrence Burns. Quarterly of the National Fire Protection Association, Vol. 53, No. 4, 300-316 (1960).

11. Los Angeles Fire Department, Fire Detection Systems in Dwellings. Quarterly of the National Fire Protection Association, Vol. 56, No. 3, 201-246 (1963).

12. Ives, J.M., Hughes, E.E. and Taylor, J.K., Toxic Atmospheres Associated with Real Fire Situations. Nat. Bur. Stand. (U.S.), Washington, D.C., NBS Rep. No. 10807 (1972).

13. Zikria, B.A., Ferrer, J.M. and Floch, A.B., The Chemical Factors Contributing to Pulmonary Damage in Smoke Poisoning. Surgery, Vol. 71, No. 5, 704-709 (1972).

14. Stevens R.E., Church Oyster Roast Fire Panic. Quarterly of the National Fire Protection Association, Vol. 49, No. 4, 277-285 (April 1956).

15. Watanabe, A., Testing Methods of Fire Detectors in Buildings. Symposium on Automatic Fire Detection, London (March 1972).

16. Bond, H., Ed., Fire Casualties of the German Attacks. Chapter 8, Fire and the Air War. National Fire Protection Association, Boston, Mass. (1946).

17. Dupont, H.B., How Much Heat Can Firemen Endure? Fire Engineering, Vol. 113, No. 2, 122-214 (February 1960).

18. Zikria, B.A., Sturner, W.Q., Astrajiam, N.K., Fox, Jr., C.L. and Ferrer, Jr., J.M., Respiratory Tract Damage in Burns: Pathophysiology and Therapy. Annals of New York Academy Sciences, Vol. 150, Art. 3, 618-626 (1968).

19. Zikria, B.A., Weston, A.B., Chodoff, M. and Ferrer, J.M., Smoke and Carbon Monoxide Poisoning in Fire Victims. American Association for the Surgery of Trauma, New York (October 15, 1971).

20. Threshold Limit Values of Airborne Contaminants Adopted by ACGIH for 1973. American Conference of Governmental Industrial Hygienists, Cincinnati, Ohio (1973).

21. Yuill, C.H., The Life Hazard of Bedding and Upholstery Fires. Journal of Fire and Flammability, Vol. 1, 312-323 (October 1970).

22. Claudy, W.D., Respiratory Hazards of the Fire Service. National Fire Protection Association, Boston (1957).

23. Annual Summary Report: 1 July 72-30 June 73, Johns Hopkins University Applied Physics Lab. (September 1973).

24. Pryor, A.J., Johnson, D.E. and Jackson, N.N., Hazards of Smoke and Toxic Gases Produced in Urban Fires. Southwest Research Institute, San Antonio, Texas (September 1969).

25. Sax, N.I., Dangerous Properties of Industrial Materials. 3rd Ed., Reinhold, New York (1968).

26. Gross, D., Loftus, J.J., Lee, T.G. and Gray, V.E., Smoke and Gases Produced by Burning Aircraft Interior Materials. Nat. Bur. Stand, (U.S.), Washington, D.C., NBS Building Science Series 18 (February 1969).

27. Steere, N.V., Ed., CRC-Handbook of Laboratory Safety. 2nd Ed., Chemical Rubber Company, Cleveland, Ohio (1971).

28. Tryon, G.H. and McKinnon, G.P., Eds., Fire Protection Handbook. National Fire Protection Association, Boston (1969).

29. Fire Protection of Concorde. Fire International, Vol. 2, No. 21, 20-25 (July 1968).

30. Fire Detection Systems --- The Range of Choice. Fire Protection Association Journal, No. 91, 18-23 (July 1971).

31. Lindberg, Jr., J.E., Sensor for Heat or Temperature Detection and Fire Detection. United States Patent No. 3,277,860 (October 1966).

32. Johnson, J.E., Engineering Early Warning Fire Detection. Fire Technology, Vol. 5, No. 1, 5-15 (February 1969).

33. Johnson, J.E., Concepts of Fire Detection. Engineering and Technical Conference on Early Warning Fire Detection Principles, Washington, D.C. (November 4-5, 1970).

34. Putnam, T.M. and Parker, J.R., Tests of Combustion Product Detectors in a Radiation Environment. Fire Technology, Vol. 5, No. 4, 273-283 (November 1969).

35. Foster, W.W., Attenuation of Light by Wood Smoke. British Journal of Applied Physics, Vol. 10, 416-420 (September 1959).

36. Wampfler, G.L., Light Transmission and Light Scattering Properties of Smoke. Forest Products Laboratory, Madison, Wis., F.D.L. 0137 (June 1966).

37. Fire Tests With Various Fire Detecting Systems Carried Out in the Fire Test Room of Cerberus Ltd. Manndorf/ Switzerland October 1960-July 1961. Cerberus Ltd., Manndorf, Switzerland (1961).

38. Haessler, W.M., Smoke Detection by Forward Light Scattering. Fire Technology, Vol. 1, No. 1., 43-51 (February 1965).

39. Taguchi Gas Sensor Data Sheets. Figaro Engineering, Inc., Osaka, Japan (no date).

40. Lawson, D.I., Fire Detection Using Laser Beams. Fire Technology, Vol. 4, No. 4, 257-264 (November 1968).

41. Peberdy, W.T., Operating Experience With the Laser Fire Detection System. Symposium on Automatic Fire Detection, London (March 1972).

42. O'Sullivan, E.F., Ghosh, B.K. and Turner, J., Experiments on the Use of a Laser Beam for Heat Detection. Fire Technology, Vol. 7, No. 2, 133-144 (May 1971).

43. Lawson, D.I., A Laser Beam Fire Detection System. Institution of Fire Engineers Quarterly, Vol. 30, No. 79, 284-300 (September 1970).

44. Ghosh, B., Recent Developments in the Laser Beam Fire Detection System. Symposium on Automatic Fire Detection, London (March 1972).

45. Barrett, R., Optimum Design in Infrared Flame Detectors. Symposium on Automatic Fire Detection, London (March 1972).

46. Waters, G.L.C., Advances in Infrared Fire Detection. Fire International, Vol. 3, No. 27, 67-70 (January 1970).

47. Application Data, Fire Detection and Alarm System-Flame Detectors. Pyrotronics, Inc., Cedar Knolls, N.J. (no date).

48. New System for Detecting Sparks. Fire International, Vol. 2, No. 23, 44-45 (January 1969).

49. Eggleston, L.A., Fire Safety in Hyperbaric Chambers. Fire Technology, Vol. 6, No. 4, 271-291 (November 1970).

50. Campbell, R.B. and Chang, H.C., Solid State Ultraviolet Devices for Fire Detection in Advanced Space Flight Vehicles. Air Force Aero Propulsion Laboratory, Wright-Patterson AFB, Ohio, AFAPL-TR-67-23 (May 1967).

51. Trumble, T.M., Integrated Fire and Overheat Detection System for Manned Flight Vehicles. Air Force Aero Propulsion Laboratory, Wright-Patterson AFB, Ohio, AFAPL-TR-67-129 (October 1967).

52. Van Luik, Jr., F.W. and Ludwig, Jr., F.A., Measurement of Submicron Particles and Their Relation to Air Pollution. Instrument Society of America, Capital Cities Control Conference (1972).

53. Hurn, M.J., Fire Detection Using a Sub-micron Particle Detector Symposium on Automatic Fire Detection, London (March 1972).

54. Skala, G.F., A New Instrument for the Continuous Measurement of Condensation Nuclei. Analytical Chemistry, Vol. 35, 702-706 (May 1963).

55. Traub, A.C., Fiber Optics in Aerospace Vehicle Hazard Detection. Air Force Systems Command, Wright-Patterson AFB, Ohio, ASD-TDR-62-731 (December 1962).

56. Kapany, N.S., Fiber Optics and the Laser. Annals of New York Academy of Sciences, Vol. 122, Article 2, 615-637 (May 1965).

57. Nash, P., Automatic Fire Detection. The Biscuit Maker and Plant Baker, 3-9 (March-June 1963).

58. Sonaglioni, A., Ultra Sonics and Fire Protection. Fire International, Vol. 1, No. 11, 32-34 (January 1966).

59. A Study of the Baptist Towers Housing for the Elderly Fire. National Fire Protection Association, Boston, LS-1 (1973).

60. Fry, J.F. and Eveleigh, C., The Behaviour of Automatic Fire Detection System. Joint Fire Research Station, Boreham Wood, England, FR Note 810 (March 1972).

61. Kennedy, R.H., The Assessment of Ambient Conditions to Which Fire Detectors are Exposed. Symposium on Automatic Fire Detection, London (March 1972).

62. Household Fire Warning Equipment, Standard for the Installation, Maintenance and Use of. National Fire Protection Association, Boston, NFPA No. 74 (1972).

63. Report on Incandescent Lamp Life in Smoke Detectors. Electro Signal Lab., Inc., Rockland, Mass. (1972).

64. Smoke Detectors, Photoelectric Type. Underwriters' Laboratories, Inc., Northbrook, Ill., UL 168-1971 (1971).

65. Fire Detection Thermostats. Underwriters' Laboratories, Inc., Northbrook, Ill., UL 521 (1971).

66. Smoke Actuated Detectors for Automatic Fire Alarm Systems, Approval Standard. Factory Mutual Research Corporation, Norwood, Mass., Class No. 3230-3250 (1973).

67. Thermostats for Automatic Fire Detection, Approved Standard. Factory Mutual Research Corporation, Norwood, Mass., Class No. 3210 (1973).

68. Guide Criteria for Operation Breakthrough. Vol. I, Section L.4.2.10; Vol. II, Section L.4.2.10; Vol. III, Section J.4.2.1; Vol. IV, Section J.4.2.1, Department of Housing and Urban Development, Washington, D.C. (September 1972).

69. Specification for Automatic Fire Alarm Systems in Buildings, Part I. Heat Sensitive (Point) Detectors. British Standards Institution, London, BS3116: Part I; 1970 (1970).

70. Poulain, P., Approval Tests of Detector and Indicator Panels for Automatic Fire Detection in France. Symposium on Automatic Fire Detection, London (March 1972).

71. Heat-Acutated Detectors for Automatic Fire Alarm Installations. Standards Association of Australia, N. Sidney, AS A122-1968 (1968).

72. Heat Actuated Fire Detectors. Standards Association of New Zealand, Wellington, NZSS 2139:1967 (1967).

73. Technical Standards for Fire Alarm Systems. Ministry of Autonomy, Tokyo, Japan, Ministerial Ordinance No. 4 (March 31, 1969).

74. Aachen Test Scheme. Technischen Hochschule, Aachen, West Germany (no date).

75. Hosemann, J.P., Considerations in Testing Smoke Detectors. Proceedings, Rheinisch-Westfalischen Technischen Hochschule, Aachen, West Germany (October 4-6, 1971).

76. Los Angeles City Fire Department, Fire Detection Systems in Dwellings. Quarterly of the National Fire Protection Association, Vol. 56, No. 3, 201-215 (1963).

77. Rueger, R.A., Home Fire-Alarm Tests. Bloomington, Minn. Fire Department (May 17, 1969).

78. Report on Experiments, Measurements and Observations on Various Types of Fire Outbreak. Cerberus Ltd., Manndorf, Switzerland (May-June 1972).

79. Fire Research in Hanger II of the Airfield Real Estate Company, Zurich-Kolten, Switzerland. Cerberus Ltd., Manndorf, Switzerland (May 1961).

80. Official Report on the Fire Alarm Tests, Malar Baths, Stockholm, Sweden. Cerberus Ltd., Manndorf, Switzerland (October 1960).

81. Carter, D.I., Fire Extinguishment and Protective Clothing Evaluations. Proceedings of the Fire Hazard and Extinguishment Conference, Brooks AFB, Texas (May 1967).

82. Eggleston, L.A., Fire Detection in Hyperbaric Chambers. Fire Technology, Vol. 7, No. 1, 25-35 (February 1971).

83. Lucht, D.A., Legal Requirements for Fire Alarms in Ohio Dwellings. Fire Journal, Vol. 66, No. 2, 34-37 (March 1972).

84. ACTON (Town) Building Code. Section 138, Acton, Mass. (1973).

85. Dallas (City) Building Code. Section 1310, Dallas, Texas (February 1, 1973).

86. BOCA Basic Building Code/1970 with 1973 Revisions. Building Officals Conference of America, Chicago, Ill. (1973).

87. Uniform Building Code. 1973 Edition, International Conference of Building Officials, Whittier, Calif. (1973).

88. Mobile Homes, Standard for. National Fire Protection Association, Boston, Mass. NFPA No. 501B (1972).

89. Minimum Property Standards for Multi-Family Housing, General Revision M-23. Housing and Urban Development, Washington, D.C., FHA 2600 (1973).

90. Minimum Property Standards for Housing for the Elderly and Handicapped, General Revision E-3. Housing and Urban Development, Washington, D.C., HUD PG-46 (1973).

91. Minimum Property Standards for Nursing Homes, Change No. 5. Housing and Urban Development, Washington, D.C., FHA 4514.1 (1973).

16. Bibliography

Aachen Test Scheme. Technischen Hochschule, Aachen, West Germany (no date).

Acton(Town) Building Code. Section 138, Aaton, Mass. (1973).

Aircraft Interior Fire Protection Systems 1971, Tentative Recommended Practice On. National Fire Protection Association, Boston, Mass., NFPA No. 421-T (May 1971).

Akita, K., Studies on the Mechanism of the Ignition of Wood. Fire Research Institute of Japan, Tokyo, Report No. 9 (March 1959).

Alpert, R.L., Response Time of Ceiling-Mounted Fire Detectors. Fire Technology, Vol. 8, No. 3, 181-195 (August 1972).

Application Data, Fire Detection and Alarm Systems-Flame Detectors. Pyrotronics, Inc., Cedar Knolls, N.J. (no date).

Automatic Fire Detection: False Alarms. Fire Protection Association Journal, Vol. 146, No. 88, 146-148 (1970).

Automatic Fire Protection Systems. Fire Protection Association Journal, No. 81, 192-205 (February 1969).

Automatic Mechanical-Draft Oil Burners Designed for Domestic Installations. (A Filter Paper Method for Determining Smoke Densities in Flue Gases.) Nat. Bur. Stand. (U.S.), Washington, D.C., CS 75-56 (October 1956).

Axrord, D.W.E., Sawyer, K.F. and Sugden, T.M., The Physical Investigation of Certain Hydroscopic Aerosols. Proceedings Royal Society, Vol. A195, 13-33 (1948).

Barrett, R., Optimum Design in Infra-red Flame Detectors. Symposium on Automatic Fire Detection, London (March 1972).

Bastuscheck, C.P., Pre-prototpe Hand-held Fire Detectors. Fire Technology, Vol. 2, No. 1, 60-68 (February 1966).

Beatty, Jr., K.C. and Deas, Jr., J.E., The Measurement of Smoke, Heating, Piping and Air Conditioning. Vol. 22, 107-115 (1950).

Blackwell, H.R., Contrast Thresholds of the Human Eye. Journal of the Optical Society of America, Vol. 36, No. 11, 624-643 (1946).

BOCA Basic Building Code/1970 with 1973 Revisions. Building Officials Conference of America, Chicago, Ill. (1973).

Bocek, P., Novak, J. and Janak, J., Effect of Pressure on the Performance of the Flame Ionization Detector. Journal of Chromatography, Vol. 43, 431-436 (1969).

Bono, J.A. and Breed, B.K., Study of Smoke Ratings Developed in Standard Fire Tests in Relation to Visual Observations. Underwriters' Laboratories, Inc., Northbrook, Ill., Bulletin of Research No. 56 (April 1965).

Brenden, J.J., Determining the Utility of a New Optical Test Procedure for Measuring Smoke from Various Wood Products. Departmet of Agriculture, (U.S.) Washington, D.C., Research Paper, FPL 137 (June 1970).

Brinkworth, B.J., Measurement of True Light Absorption in Aerosols. British Journal of Applied Physics, Vol. 16, 1901-1906 (1965).

Brown, J., Moores, N. and Kirby, C., The Early Detection of Fires in Coal Pulverizing Mills by Measurement of Carbon Monoxide. Symposium on Automatic Fire Detection, London (March 1972).

Brown, W., Ledoux, E., Mailloux, W., Brown, J.A. and Sayre, E.L., et al., Fire Protection and Recompression Systems for a Hypobaric Research Chamber. Fairchild Hiller Corp., Bay Shore; Fenwal, Inc., Ashland, Mass. and Aerospace Medical Research Labs., Wright-Patterson AFB, Ohio, AD-691031; AMRL-TR-68-146 (February 1969).

Bruce, H.D. and Downs, L.E., Surface Flammabiity of Various Wood-Base Building Materials. Forest Products Laboratory, Madison, Wis., Report No. 2140 (1959).

Bumgardner, H.W., Smoke Density Measurements. Mechanical Engineering, Vol. 60, 610-612 (1938).

Burry, P.E., General Requirements for Fire Data Systems with Particular Reference to the Reduction of Fire Losses. Symposium on Automatic Fire Detection, London (March 1972).

Byram, G.H., Visibility Photometers for Measuring Atmospheric Transparency. Journal of the Optical Society of America, Vol. 25, 388-395 (December 1935).

Campbell, R.B. and Chang, H.C., Solid State Ultraviolet Devices for Fire Detection in Advanced Space Flight Vehicles. Air Force Aero Propulsion Lab., Wright-Patterson, AFB, Ohio, AFAPL-TR-67-23, AD-815895 (May 1967).

Caras, G.J., Prevention, Detection, and Suppression of Hydrogen Explosions in Aerospace Vehicles. Redstone Scientific Information Center, Redstone Arsenal, Ala., AD-63434, RSIC-486 (March 31, 1966).

Carter, D.I., Fire Prevention and Protection in Oxygen Enriched Atmospheres. Aerospace Medical Div., Brooks AFB, Texas, N69-34751, AD-691092; AGARD Conf., Proc. No. 41, Aerospace Medical Panel, 25th Meeting, London, England (October 15-17, 1968).

Cass, R.A., Smoke Control Design. Journal of Cellular Plastics, 41-43 (January 1967).

Fire Tests Conducted by Chief Engineer Georg Kramm in Vaults of Former Norris Hall, Nurenberg. Cerberus Ltd., Manndorf, Switzerland (April 1958).

Chaffee, D.L., A Study of Fire Alarms and Fire Alarm Systems. Naval Civil Engineering Laboratory, Technical Note N-980 (August 1968).

Chandler, L.T., Fire Detection Systems for the Home: The Electrical Industry's View. Fire Journal, Vol. 59, No. 1, 11-13 (January 1965).

Christian, W.J. and Dubivsky, P.M., Household Fire Detection and Warning: The Key to Improved Life Safety. Fire Journal, Vol. 67, No. 1, 55-61, and 88 (January 1973).

Clardy, E.K. and Messinger, A., Combustible Gas Detection in Containers. U.S. Patent 3,489,523 (January 13, 1970).

Cockram, R.W.J., Combating Fire Risks in Aircraft. Tech Air, Vol. 16, 2-7 (November 1970).

Cohen, J., Edelman, S. and Vezzetti, C., Scanning Thermal Detector Developed. Nat. Bur. Stand. (U.S.) Washington, D.C., NBS Technical News Bulletin, Vol. 56, No. 3, 52-53 (December 1972).

Collideg, J.E. and Schulz, G.J., Photoelectric Measurement of Dust. Instruments, Vol. 24, 534, 544, 578-80 (1951).

Comeford, J.J., The Spectral Distribution of Radiant Energy of a Gas-Fired Radiant Panel and Some Diffusion Flames. Combustion and Flame, Vol. 18, 125-132 (1972).

Connor, W.D. and Hodkinson, J.R., Observations of the Optical Properties and Visual Effects of Smoke Plumes. Air Pollution Control Association, 57th Annual Meeting, Paper No. 64-117 (June 1964).

Coulter, G.L., Automatic-closing Smoke Barrier Doors. Fire Journal, Vol. 66, No. 6, 28-31 (November 1972).

Cucchiara, O., Goodman, P. and Donaghue, T., Development of a Hazardous Vapor Detection System for Advanced Aircraft. Air Force Aero Propulsion Laboratory, Wright-Patterson AFB, Ohio, AFAPL-TR-67-123, Supplement 1 (1967).

Dallas (City) Building Code. Section 1310, Dallas Texas (February 1, 1973).

Dalzell, W.H. and Sarofim, A.F., Optical Constants of Soot and Their Application to Heat-Flux Calcultions. AIChE-ASME Heat Transfer Conference, Paper No. 68-HT-13 (April 1968).

Delaney, C.L., Fire Detection System Performance in USAF Aircraft. Air Force Aero Propulsion Laboratory, Wright-Patterson AFB, Ohio, AFAPL-TR-72-49 (August 1972).

Doctor, R.D., Levenson, G.S., and Tenzer, A.J., An Early Detection and Warning System for Fires in Buildings. New York City-Rand Institute, Report R-880-NYC (December 1971).

Eggleston, L.A., Fire Detection in Hyperbaric Chambers. Fire Journal, Vol. 7, No. 3, 25-35 (February 1971).

Eggleston, L.A., Fire Safety in Hyperbaric Chambers. Fire Technology, Vol. 6, No. 4,]71-291 (November 1970).

Eggleston, L.A., Fire Tests in a Hospital Room. Southwest Research Institute, Final Report No. 3-2947-350 (June 1971).

Einhorn, I.N., Michelson, R.W., Shah, B. and Craig, R., Smoke Development in Urethane Foams. Journal of Cellular Plastics, 188-197 (May 1968).

Emson, I.C., The Examination of Fire Detector Control Equipment. Joint Fire Research Organization, Boreham Wood, England, Fire Research Note 549 (September 1964).

Emson, I.C. and Nash, P., Summary Report of the Sound Levels of Audible Warning Devices. Joint Fire Research Organization, Boreham Wood, England, Fire Research Note 498 (April 1962).

Entine, G., Mitchell, C.R., Wald, F.V. and Cocks, F.H., High Temperature Infrared Detectors for Aircraft Fire Detection. Tyco Labs., Inc., Waltham, Mass., C-111, AFAPL-TR-71-89, Contract F33615-71-C-1084 (December 1971).

Fire Detection Systems -- The Range of Choice. Fire Protection Association Journal, No. 91, 18-23 (July 1971).

Fire Detection Thermostats, 1971. Underwriters' Laboratories, Inc., Northbrook, Ill., UL521 (1971).

Fire Protection Design for Facilities, Standard for. National Aeronautics and Space Administration, Cocoa Beach, Flordia, KSC-STD-F-0004A (August 16, 1971).

Fire Protection of the Concorde. Fire International, Vol. 2, No. 21, 20-25 (July 1968).

Fire Research in Hanger II of the Airfield Real Estate Company Zurich-Kloten, Switzerland. Cerberus Ltd., Manndorf, Switzerland (May 1961).

Fire Tests with Various Detecting Systems Carried Out in the Fire Test Room of Cerberus Ltd. Manndorf/Switzerland October 1960-July 1961. Cerberus Ltd., Manndorf, Switzerland (1961).

Foster, W.W., Attenuation of Light by Wood Smoke. British Journal of Applied Physics, Vol. 10, 416-420 (September 1959).

Fry, J.F. and Eveleigh, C., The Behaviour of Automatic Fire Detection Systems. Joint Fire Research Organization, Boreham Wood, England, Fire Research Note 810 (March 1970).

Foster, W.W., Attenutation of Light by Wood Smoke. British Journal of Applied Physics, Vol. 10, 416-420 (1959).

Foster, W.W., Deposition of Unipolar Charged Aerosol Particles by Mutual Repulsion. British Journal of Applied Physics, Vol. 10, 206-213 (1959).

Gallagher, E.L., Household Fire Warning Equipment--The Case for Heat Detectors. Fire Command, Vol. 40, No. 6, 32-34 (June 1973.

Garrett, R.M., Multiplex Alarm Systems--Promise for the Future. Fire Journal, Vol. 66, No. 5, 14-15 (September 1972).

Gaskill, J.R. and Veith, C.R., Opacity of Smokes from Certain Woods and Plastics Under Smoldering and Burning Conditions. American Chemical Society Symposium on the Flammability Characteristics of Polymers (1968).

Gaskill, J.R., Proposal for the Development of a Material Smoke Obscuration Index. Lawrence Radiation Laboratory, Livermore, Calif., Bulletin (May 14, 1968).

Ghosh, B., Recent Developments in the Laser Beam Fire Detectin System. Symposium on Automatic Fire Detection, London (March 1972).

Grabowski, G.J., Fire Detection and Actuation Devices for Halon Extinguishing Systems. Symposium on an Appraisal of Halogenated Fire Extinguishington Agents, Washington, D.C. (April 11-12, 1972).

Green, H.L. and Lane, W.R., Particulate Clouds: Dusts, Smokes, and Mists. Van Nostrand, New York, 2nd Ed. (1964).

Gross, D., Loftus, J.J., Lee, T.G. and Gray, V.E., Smoke and Gases Produced by Burning Aircraft Interior Materials. Nat. Bur. Stand. (U.S.), Washington, D.C., Building Science Series 18 (February 1969).

Gross, D., Loftus, J.J. and Robertson, A.F., Method for Measuring Smoke from Burning Materials. ASTM Symposium on Fire Test Methods - Restraint and Smoke; Special Technical Publication No. 422 (1967).

Gross-Gronomski, L., Smoke in Gas-Turbine Exhaust. American Society of Mechanical Engineers, Annual Meeting and Energy Systems Exposition, Paper No. 67-WA/GT-5 (August 1967).

Guide Criteria for Operation Breakthrough, Vol. I, Section L.4.2.10; Vol. II, Section L.4.2.10; Vol. III, Section J.4.2.1; Vol. IV, Section J.4.2.1. Department of Housing and Urban Development (U.S.), Washington, D.C. (September 1972).

Haessler, W.M., Smoke Detection by Forward Light Scattering. Fire Technology, Vol. 1, 43-51 (1965).

Handbook on Aerosols. Atomic Energy Comm. (U.S.), Washington, D.C. (1950).

Hansberry, H.L., Aircraft Fire Protection Developments by the Federal Aviation Administration (1940-1970). ASME Gas Turbine Conference and Products Show, Brussels, Belgium (May 24-28, 1970).

Heat-actuated Detectors for Automatic Fire Alarm Installations. Standards Association of Australia, North Sidney, A.S. A122-1968 (1968).

Heat Actuated Fire Detectors. Standards Assocition of New Zealand, Wellington, NZSS 2139:1967 (1967).

Hemeon, W.C.L., Sensenbough, J.D. and Haines, Jr., G.F., Measurement of Air Pollutin. Instruments, Vol. 26, 566-94 (1952).

High Speed Sprinkler System for High Racked Warehouses. Fire International, Vol. 3, No. 37, 88-91 (September 1972).

Hird, B., Bigmore, R.H. and Pickard, W., Siting of Heat-Sensitive Fire Detectors in Buildings. Joint Fire Research Organization, Boreham Wood, England, Fire Research Note 475 (October 1961).

Hirsch, S.N., Airborne Infrared Mapping of Forest Fires. Fire Technology, Vol. 1, No. 4 288-294 (1965).

Hirsch, S.N., Application of Infrared Scanners to Forest Fire Detection. International Remote Sensing Workshop, Ann Arbor, Mich. (May 1971).

Hirsch, S.N., Bjornsen, R.L., Madden, F.H. and Wilson, R.A., Project Fire Scan Fire Mapping. Forest Service (U.S.), Washington, D.C., Research Paper INT-49, Final Report (1968).

Holmes, W.G., Automatic Fire Detection for the Home. Quarterly of the National Fire Protection Association, Vol. 46, No. 1, 32-40 (July 1952).

Home Fire Alarm Tests. Fire Journal, Vol. 65, No. 4, 12-15 (July 1971).

Hosemann, J.P., Considerations in Testing Smoke Detectors. Proceedings, Rheinisch-Westfalischen Technischen Hochschule, Aachen, West Germany (October 4-6, 1971).

Household Fire Warning Equipment, Standard for the Installation, Maintenance and Use of. National Fire Protection Association, Boston, Mass. (1972).

Hurley, T.F. and Bailey, D.L.R., The Correlation of Optical Density with the Concentration and Composition of the Smoke Emitted From a Lancaster Boiler. Journal of the Institute of Fuel, Vol. 31, 534-540 (1958).

Hurn, M.J., Fire Detection Using a Sub-micron Particle Detector. Symposium on Automatic Fire Detection, London (March 1972).

Ivin, T.F., Effect of Paint on the Response of a Heat Sensitive Line Detector. Joint Fire Research Organization, Boreham Wood, England, Fire Research Note 532 (October 1963).

Johnson, J.E., Engineering Early Warning Fire Detection. Fire Technology, Vol. 5, No. 1, 5-15 (February 1969).

Johnson, J.E., Concepts of Fire Detection. Engineering and Technical Conference on Early Warning Fire Detection Principles, Washington, D.C: (November 4-5, 1970).

Kapany, N.S., Fiber Optics and the Laser. Annals of New York Academy of Sciences, Vol. 122, Article 2, 615-637 (May 1965).

Kennedy, R.H., The Assessment of Ambient Conditions to Which Fire Detectors are Exposed. Symposium on Automatic Fire Detection, London (March 1972).

Kishitami, K., Study on Injurious Properties of Combustion Products of Building Materials at Initial Stage of Fire. Journal of the Faculty of Engineering, University of Tokyo, Vol. 31 (1971).

Lancaster, B.W. and Strauss, W., Angle Scanning Mounting for a Light Scattering Photometer. Journal of Scientific Instruments, Vol. 43, 395-396 (1966).

Lancaster, S., Things to Consider when Buying Automatic Fire Detection for the Home. Quarterly of the National Fire Protection Association, Vol. 53, No. 5, 278-284 (January 1969).

Lawson, E.I., A Laser Beam Fire Detection System. Institution of Fire Engineers Quarterly, Vol. 30, No. 79, 284-300 (September 1970).

Lawson, D.I., Fire Detection Systems Using Laser Beam. Joint Fire Research Organization, Boreham Wood, England, Fire Research Note 673 (August 1967).

Lawson, D.I., Fire Detection Using Laser Beams. Fire Technology, Vol. 4, No. 4, 257-264 (November 1968).

Lawson, D.I., A Laser Beam Fire Detection System. Fire Technology, Vol. 6, No. 4, 305-311 (November 1970).

Lawson, D.I., Memo on Potential Saving that Might be Effected by Rapid Fire Detection. Joint Fire Research Organization, Boreham Wood, England, Fire Research Note 781 (September 1969).

Lefebvre, A.H., Radiation from Flames in Gas Turbines and Rocket Engines. Symposium (International) on Combustion, 12th, The Combustion Institute, Pittsburgh, Pennsylvania, 1247-1253 (1969).

Lindberg, Jr.,J.E., Sensor for Heat or Temperature Detection and Fire Detection. United States Patent No. 3,277,860 (October 1966).

Littlewood, A., Measurement of the Optical Density of Smoke in a Chimney. Journal of Scientific Instruments, Vol. 33, 495-499 (1956).

Los Angeles City Fire Department, Fire Detection Systems in Dwellings. Quarterly of the National Fire Protection Association, Vol. 56, No. 3, 201-46 (1963).

Los Angeles Fire Department, Operation School Burning. National Fire Protecion Association, Boston, Mass. (1959).

Lothian, G.F. and Chappel, R.P., The Transmission of Light Through Suspensions. Journal of Applied Chemistry, Vol. 1, 475-482 (1951).

Lucht, D.A., Legal Requirements for Fire Alarms in Ohio Dwellings. Fire Journal, Vol. 66, No. 2, 34-37 (March 1972).

Luck, H., Economics of Fire Protection With Fire Detectors. Fire Technology, Vol. 9, No. 1, 56-64 (February 1973).

Luck, H., A Theoretical Approach to Optimising Effectiveness of Fire Detector Systems. Symposium on Automatic Fire Detection, London (March 1972).

March, J.F., Nicholas, E.B. and Demaree, J.E., Flammability and Smoke Characteristics of Aircraft Interior Materials. Aircraft Development Service, Washington, D.C., ADS-3 (January 1964).

Marks, L.W., Inadequacy of the Ringelmann Chart. Mechanical Engineering, 59, 681-85 (1937).

Maurodinenu, R. and Boiteux, H., Flame Spectroscopy. John Wiley and Sons, Inc., New York (1965).

McGuire, J.H. and Hird, D., A Fire Detector for Large Transformer Installations. Joint Fire Research Organization, Boreham Wood, England, Fire Research Note 396 (April 1959).

McGuire, J.H. and Ruscoe, B.E., The Value of a Fire Detector in the Home. Division of Building Research, National Research Council of Canada, Ottawa, Fire Study No. 9 (1962).

McGuire, J.H. and Smith, P.C., A Simple Ignition Detector. Joint Fire Research Organization, Boreham Wood, England, Fire Research Note 378 (December 1958).

Meili, E., The Ionization Chamber Smoke Detector. Swiss Electrotechical Association, Bulletin No. 23 (1952).

Middleton, W.E.K., Vision Through the Atmosphere. University of Toronto Press, Toronto, Canada (1952).

Minimum Property Standards for Housing for the Elderly and Handicapped, General Revision E-3. Housing and Urban Development (U.S.), Washington, D.C., HUD PG-46 (1973.

Minimum Property Standards for Multi-Family Housing, General Revision M-23. Housing and Urban Development (U.S.), Washington, D.C., FHA 2600 (1973).

Minimum Property Standards for Nursing Homes, Change No. 4. Housing and Urban Development (U.S.), Washington, D.C., FHA 4514.1 (1973).

Mobile Homes, Standard for. National Fire Protection Association, Boston, Mass., NFPA No. 501B (1972).

Muller, A., Phenomena Associated with the Fire and Their Influence Upon Automatic Fire Alarm. VFDB-Zeitschrift, No. 1 (1966).

Nash, P., Automatic Fire Detection. The Biscuit Maker and Plant Baker, 3-9 (March/June 1963).

Nash, P., Pickard, R.W. and Hird, D., Automatic Heat-Sensitive Fire Detection Systems. Joint Fire Research Organization, Boreham Wood, England, Fire Research Note 455 (February 1961).

New Smoke Detector. Fire International, Vol. 3, No. 23, 57 (1969).

New System for Detecting Sparks. Fire International, Vol. 2, No. 23, 44-45 (January 1969).

Niemeyer, R.G., Containment Integrety of Ra-266 and Am-241 Foils Employed in Smoke Detectors. Oak Ridge National Laboratory, Tenn., ORNL-TM-2684, Contract W-7405-ENG-26 (October 1969).

O'Dogherty, M.J., The Detection of Fire by Smoke. Part 1. Research Programme and Development of Standard Test Methods. Joint Fire Research Organization, Boreham Wood, England, Fire Research Note 748 (February 1969).

O'Dogherty, M.J., Experiments on Smoke Detection. Part 1. Flammable Liquid Fires. Joint Fire Research Organization, Boreham Wood, England, Fire Research Note 770 (June 1969).

O'Dogherty, M.J., Some Modern Developments in Fire Detection and Extinction. Institution of Fire Engineers Quarterly, Vol. 27, No. 66, 135-157 (1967).

O'Dogherty, M.J., Vibration Testing of Fire Detectors. Joint Fire Research Organization, Boreham Wood, England, Fire Research Note 746 (January 1969).

O'Dogherty, M.J., Young, R.A. and Lange, A., Experiments on Smoke Detection. Part 2. Fires in Wood Cribs, Rubber Cribs, Polyvinyl Chloride Powder and Petrol. Joint Fire Research Organization, Boreham Wood, England, Fire Research Note 780 (September 1969).

Official Report on the Fire-alarm Tests Carried Out in the Former Maelar Baths (Hantverkargatan 11), Stockholm, on the 17th and 26th October 1960. Stockholm City Fire Department, Sweden (1960).

O'Sullivan, E.F., Ghosh, B.K. and Summer, R.L., Experiments on Smoke Detection. Part 3. Fires in Expanded Polystyrene, Polyurethane Foam and Compressed Cork. Joint Fire Research Organization, Fire Research Note 845 (October 1970).

O'Sullivan, E.F., Ghosh, B.K. and Turner, J., Experiments on the Use of a Laser Beam for Fire Detection. Part 1. Heat Detection. Joint Fire Research Organization, Boreham Wood, England, Fire Research Note 823 (October 1970).

O'Sullivan, E.F., Ghosh, B.K. and Turner, J., Experiments on the Use of a Laser Beam for Heat Detection. Fire Technology, Vol. 7, No. 2, 133-144 (May 1971).

Paine, T.O. and Proffit, R.L., Hydrogen Fire Detection System with Logic Circuit to Analyze the Spectrum of Temporal Variations of the Optical Spectrum. United States Patent 3,609,364 (September 28, 1971).

Pattle, R.E. and Burgess, I., Toxic Effects of Mixtures of Sulphur Dioxide and Smoke with Air. Journal of Pathology, Vol. 73, 411 (1957).

Peberdy, W.T., Operating Experience with the Laser Fire Detection System. Symposium on Automatic Fire Detection, London (March 1972).

Petersen, R.C., Fire Detection by 'Observation'. Fire Journal, Vol. 64, No. 4, 15-17 (July 1970).

Phillips, B.G., Fiber-Optics Hazard Identification Device. Optics Technology, Inc., Palo Alto, Calif., AD-697036; AFAPL-TR-69-78, Contract AF33(615)-3532 (October 1969).

Phillips, P.E., Products of Combustion Detectors...An Assessment. National Safety News, 46-47 (November 1968).

Phillips, P.E., What's Wrong With Home Fire Alarm Systems? Fire Command, Vol. 39, No. 6, 24-26 (June 1972).

Photoelectric Smoke Density Meters, Alarms and Recorders. Reliance Instrument Mfg. Corp., Hackensack, N.J., Bulletin 1004-A (January 1965).

Pickard, R.W., A Note on the Operation of Heat Sensitive Line Detectors. Joint Fire Research Organization, Boreham Wood, England, Fire Research Note 491 (January 1962).

Pickard, R.W., Thermal Response to a Heat Sensitive Line Detector. Joint Fire Research Organization, Boreham Wood, England, Fire Research Note 521 (April 1963).

Pickard, R.W., Hird, D. and Nash, P., The Thermal Testing of Heat Sensitive Fire Detectors. Joint Fire Research Organization, Boreham Wood, England, Fire Research Note 247 (January 1957).

Pignatelli, A.B., A Rapid Response Flame Detection System. Institute of Aviation Medicine, Farnborough, England, N67-34379; PFRC Memo-228 (January 1966).

Poulain, P., Approval Tests of Detector and Indicator Panels for Automatic Fire Detection in France. Symposium on Automatic Fire Detection, London (March 1972).

Pre-prototype Hand-held Fire Detectors. Final Report. HRB-Singer, Inc., State College, Pa., Contract OCD-PS-65-11 (March 1965).

Purdom, P.W., Source Monitoring. Volume 2, Chapter 29, Air Pollution, Academic Press, 2d Ed., New York (1968).

Putnam, T.M. and Parket, J.R., Tests of Combustion Product Detectors in a Radiation Environment. Fire Technology, Vol. 5, No. 4, 273-283 (November 1969).

Rammelsburg, M.F. and Dierdorf, P.R., Evaluation of a Flame Surveillance-type Detector. National Aviation Facilities Experimental Center, Atlantic City, N.J., AD-255460 (April 1960).

Rarig, F.J. and Bartosic, A.J., Evaluation of the XP-2 Smoke Density Chamber. ASTM Symposium on Fire Test Methods - Restraint and Smoke; Special Technical Publication No. 422, 106-24 (1967).

Rasbash, D.J., The Efficiency of Hand Lamps in Smoke. Institution of Fire Engineers Quarterly, Vol. 11, 46-59 (1951).

Rasbash, D.J., The Role of Fire Detection Systems is Protection Against Fires. Symposium on Automatic Fire Detection, London (March 1972).

Reed, L.E., The Estimation of the Darkness of Smoke by Visual Methods. Journal of the Institute of Fuel, Vol. 32, 3-9 (1959).

Report on Experiments, Measurements and Observations on Various Types of Fire Outbreak, May-June 1972. Cerberus Ltd., Manndorf, Switzerland (1972).

Report on Incandescent Lamp Life in Smoke Detectors. Electro Signal Lab., Inc., Rockland, Mass. (1972).

Riley, J.F., Detection and Analysis of Binary Gas Phase Mixtures. Fire Technology, Vol. 9, No. 1, 15-23 (February 1973).

Riemer, O., A Self-generating Overheat Detection System for Use on USAF Aircraft. Air Force Aero Propulsion Laboratory Wright-Patterson AFB, Ohio (August 1972).

Ringelmann Smoke Charts. Bureau of Mines (U.S.), Pittsburgh, Penn., Circular No. 8333 (May 1967).

Robinson, E., Effect on Physical Properties - Smoke Plume Absorption Measurements Using Laser Techniques. Volume 1, Chapter 11, Air Pollution, 2nd Ed., Academic Press, New York (1968).

Rosen, B., Dayan, V.H. and Proffit, P.L., Hydrogen Leak and Fire Detection, A Survey. Rocketdyne, Canoga Park, Calif., N70-40917; NASA-SP-5092, Contract NAS 8-5604 (1970).

Rueger, R.A., Home Fire Alarm Tests. Bloomington Fire Dept. Minn. (May 17, 1969).

Saito, F., Study on Smoke Generation From Building Materials. Part 1. Building Research Institute, Japan, Research Paper No. 33 (July 1968).

Savage, J.D., Measurement of Exhaust Smoke Density. The Engineer, 243-47 (February 17, 1961).

Sawford, F., A Smoke Density Meter. Mechanical Engineering, 999-1004 (September 1972).

Sawyer, K.F., Screening Smokes. Vol. 10, Thorpe's Dictionary of Applied Chemistry, 4th Ed., Longmans, Green and Co., New York (1950).

Scheidweiler, A., New Research Results in Fire Detection Technology. International Symposium (1968).

Sensory Aspects of Color and Radiant Energy and Its Measurement Chapters 4 and 6, Science of Color, Thomas Y. Crowell, Co., New York (1953).

Schallenberger, G.D. and Little, E.M., Visibility Through Haze and Smoke, and a Visibiity Meter. Journal of the Optical Society of America, Vol. 30, 168-70 (1940).

Shaw, W.F.B., Hurley, T.F. and Fox, L.L., The Measurement of Smoke. Heating and Ventilating Engineer and Journal of Air Conditioning, Vol. 25, 494-502 (May 1952).

Sinclair, D., Light Scattering by Spherical Particles. Journal of the Optical Society of America, Vol. 37, No. 6, 475-80 (1947).

Skala, G.F., A New Instrument for the Continuous Measurement of Condensation Nuclei. Analytical Chemistry, Vol. 35, 702-706 (May 1963).

Smoke Actuated Detectors for Automatic Fire Alarm Systems, Approval Standard. Factory Mutual Research Corporation, Norwood, Mass., Class No. 3230-3250 (1973).

Smoke Density in the Flue Gases from Distillate Fuels. American Society for Testing and Materials, Philadelphia, Penn., ASTM-D-2156, 739-742 (1965).

Smoke Density Indicator and Recorders. Electronics Corporation of America, Cambridge, Mass., Bulletin CM-32 (January 1959).

Smoke Detection System for Testing Oil Burners. Underwriters' Laboratories, Inc., Northbrook, Ill., Subject 296 Bulletin (1940).

Smoke Detectors, Photoelectric Type. Underwriters' Laboratories, Inc., Northbrook, Ill., UL 168-1971 (1971).

Smoke Inspection Guides. Public Health Service (U.S.), Washington, D.C., Title 42, Chapter 1, Part 75 of United States Code, Revised (March 12, 1968).

Sonaglioni, A., Ultra Sonic and Fire Protection. Fire International, Vol. 1, No. 11, 32-32 (January 1966).

Specification for Automatic Fire Alarm Systems in Buildings. Part 1. Heat-sensitive (Point) Detectors. British Standards Institution, London, BS 3116:Part I:1970 (1970).

Standard Method of Test for Measuring the Density of Smoke from the Burning of Decomposition of Organic Materials. Tentative Test Method Proposal. American Society of Testing and Materials, Philadelphia, Penn. (1968).

Standard Test Method Used for Measuring the Flammability and Smoke Evolution of Thin Plastic Sheeting Using the S.P.I. Tester. Custom Scientific Instruments, Inc., Whippany, N.J. Bulletin (1968).

Steiner, A.J., Fire Hazard Classification of Building Materials. Underwriters' Laboratories, Inc., Northbrook, Ill., Bulletin of Research No. 32 (September 1944).

Stevens, A., Considerations in Buying Automatic Fire Detection for the Home. Fire Journal, Vol. 62, No. 2, 32-36 (March 1968).

Stevens, A., Home Fire Warning Systems. Fire Journal, Vol. 61, No. 6, 23-26 (November 1967).

Stevens, J.R., Ultra Violet Detector for Aircraft Engines. Symposium on Automatic Fire Detection, London (March 1972).

Stoecker, W.F., Smoke Density Measurement. Mechanical Engineering, Vol. 72, 793-98 (1950).

Surface Flammability of Building Materials Using an 8 Ft. (2.44 m) Tunnel Furnace. American Society of Testing and Materials, Philadelphia, Penn., ASTM-E-286-65T, 475-481 (1965).

Surface Flammability of Materials Using a Radiant Heat Energy Source. American Society for Testing and Materials, Philadelphia, Penn., ASTM-D-162, 444-445 (1967).

Taguchi Gas Sensor Data Sheets. Figaro Engineering, Osaka, Japan (no date).

Technical Standards for Fire Alarm Systems. Ministry of Autonomy, Tokyo, Japan, Ministerial Ordinance No. 4 (March 31, 1969).

Test Method for Fire Hazard Classification of Building Materials. Underwriters' Laboratories, Inc., Northbrook, Ill., UL 723, 3rd Ed. (August 1960).

Test Schedule for Automatic Fire Alarms. Institute for Telecommunications Engineering, Technical University, Aachen, West Germany (1968).

Thermostats for Automatic Fire Detection, Approval Standard. Factory Mutual Research Corporation, Norwood, Mass., Class No. 3210 (1973).

Tolman, R.C. and Vliet, E.B., A Tyndallmeter for the Examination of Disperse Systems. Journal of the American Chemical Society, Vol. 41, 297-300 (1919).

Tolma, R.C., Vliet, E.B., Pierce, W. McG. and Dougherty, R.H., The Disappearance of Smoke in a Confined Space. Journal of the American Chemical Society, Vol. 41, 304-312 (1919).

Tolman, R.C., Tyerson, L.H., Vliet, E.B. and Brooks, A.P., Relation Between the Intensity of Tyndall Beam and Concentration of Suspensions and Smokes. Journal of the American Chemical Society, Vol. 41, 300-303 (1919).

Traub, A.C., Fiber Optics in Aerospace Vehicle Hazard Detection. Air Force Systems Command, Wright-Patterson AFB, Ohio, ASD-TDR62-731 (December 1962).

Trumble, T.M., Integrated Fire and Overheat Detection System for Manned Flight Vehicles. Air Force Aero Propulsion Labortory, Wright-Patterson AFB, Ohio, AFAPL-TR-67-129 (October 1967).

Tryon, G.H. and McKinnon, G.P., Eds., Fire Protection Handbook. 13th Ed. National Fire Protection Association, Boston (1969).

Uniform Building Code. 1973 Ed. International Conference of Building Officials, Whittier, Calif. (1973).

Van Brand, E.K., Applications of a Portable Continuous Smoke Recorder. Mechanical Engineering, Vol. 72, 479-481 (1950).

Van deHulst, H.C., Light Scattering by Small Particles. John Wiley and Sons, Inc., New York (1957).

Van Luik, Jr., F.W. and Ludwig, Jr., F.A., Measurement of Submicron Particles and Their Relation to Air Pollution. Instrument Society of America, Capital Cities Control Conference (1972).

Van Luik, Jr., F.W., Characteristics of Invisible Particles Generated by Precombustion and Combustion. Presented at the 77th Annual Meeting of the National Fire Protection Association, St. Louis, Mo., (May 17, 1973).

Wagner, J.P., A Survey of the Principal Operational Characteristics of Fire Detector Mechanisms. Fire Research Abstracts and Reviews, Vol. 13, No. 2, 95-113 (1971).

Wampfler, G.L., Light-Transmiting and Light-Scattering Properties of Smoke. Forest Products Laboratory, Madison, Wis., Research Note FPL-0137 (June 1966).

Warm-Air Furnace Burner Units Equipped with Pressure-Atomizing or Rotary-Type Oil Burners. Nat. Bur. Stand. (U.S.), Washington, D.C., CS-195-60 (1960).

Watanabe, A., Testing Methods of Fire Detectors in Buildings. Symposium on Automatic Fire Detection, London (March 1972).

Watson, P.D. and Kibler, A.L., The Relation Between Obscuring Power and Particle Number and Size of Screening Smokes. Journal of Physical Chemistry, Vol. 35, 1074-90 (1931).

Waters, G.L.C., Advances in Infra-red Fire Detection. Fire International, Vol. 3, No. 27, 67-70 (January 1970).

Whytlaw-Gray, R. and Patterson, H.S., Smoke: A Study of Aerial Disperse Systems. Edward Arnold and Co., London (1932).

Wilson, R. and Ledoux, E.F., High-Speed Protection for Personnel in Oxygen-Enriched Atmospheres. Fire Journal, Vol. 62, No. 2, 23-25 (March 1968).

Wootten, N.W., A Method for the Measurement of True Light Absorption in Aerosols. British Journal of Applied Physics, Vol. 13, 406-408 (1962).

Wyszecki, G. and Stiles, W.S., Physical Data, The Eye, and Miscellaneous Visual Concepts. Section 1, 2, 7, Color Science, John Wiley & Sons, Inc., New York (1967).

Yalof, S., Fibercell Overheat Hazard Detection System. Air Force Aero Propulsion Laboratory, Wright-Patterson AFB, Ohio, AFAPL-TR-67-62; AD-653996 (February 1967).

Yuill, C.H., The Life Hazard of Bedding and Upholstery Fires. Journal of Fire and Flammability, Vol. 1, 312-323 (October 1970).

TABLE I

THERMAL PARTICULATE POINT IN AIR

(From Van Luik (3))

Material	Temperature	
	°F	°C
Bakelite	380	191
PVC Insulation	290	142
Acrylan Carpeting	340	169
Wool	360	180
Paper	500	257
Pine Board	320	158
Polystyrene	710	373
Polyethylene	410	208
Motor Oil (SAE30)	310	153

TABLE II

EFFECT OF CARBON MONOXIDE EXPOSURE

(After Claudy (22))

Percent Concentration	ppm	Time	Effect
0.02	200	2-3 hr.	mild headache
0.08	800	45 min. 2 hour	mild headache death possible
0.32	3,200	10-15 min. 30 min.	dizziness death
0.69	6,900	1-2 min. 10-15 min.	dizziness death
1.28	12,800	2-3 breaths 1-3 min.	unconscious death

TABLE III

EFFECTS OF CARBON DIOXIDE EXPOSURE

(After Claudy (22))

Percent Concentration	ppm	Effects
0.5	5,000	increase depth of breathing
3.0	30,000	breathing rate doubles
5.0	50,000	300% increase in breathing rate
10.0	100,000	possible death even with sufficient atmospheric oxygen

TABLE IV

EFFECTS OF OXYGEN DEPLETION*

Percent	Time	Effect
21-17	Indefinate	Respiration volume decreases, loss of coordination and difficulty in thinking
17-14	2 hr.	Rapid pulse and dizziness
14-11	30 min.	Nausea, vomiting and paralysis
9	5 min.	Unconsciousness
6	1-2 min.	Death within a few minutes

* These figures are only approximate as there are some variations in the literature.

TABLE V

RATINGS OF FIXED-TEMPERATURE DETECTORS

(From UL-521 (64))

Rating	Operating Range	Maximum Ceiling Temperature
Ordinary	135-165°F (57-73°C.)	100°F (37°C.)
Intermediate	175-225°F (79-106°C.)	100-150°F (37-65°C.)
High	250-300°F (120-147°C.)	150-225°F (65-106°C.)
Extra High	325-375°F (161-188°C.)	225-300°F (106-147°C.)

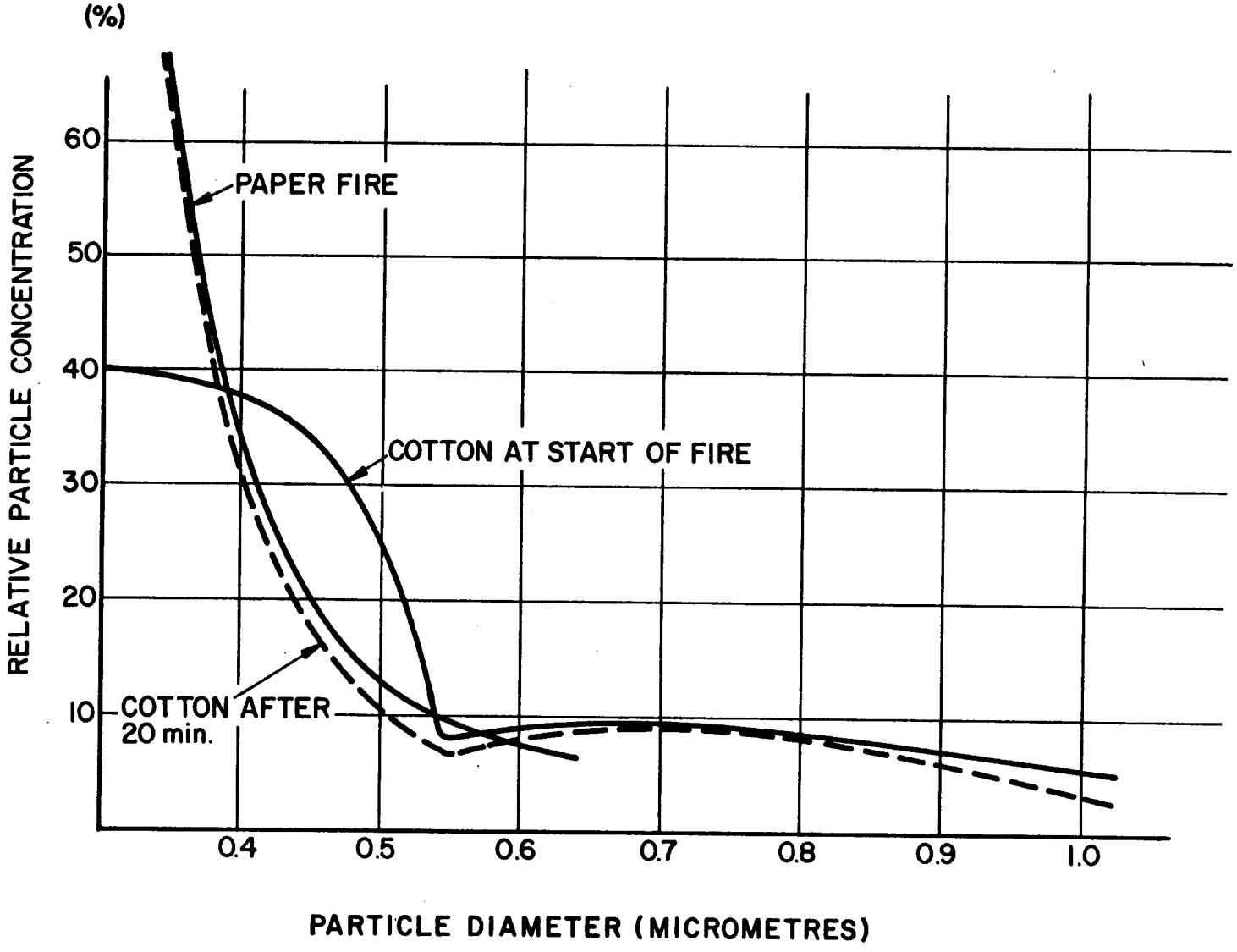

Figure 1. Properties of a Smoldering Cotton Fire.
(From Scheidweiler, (5))

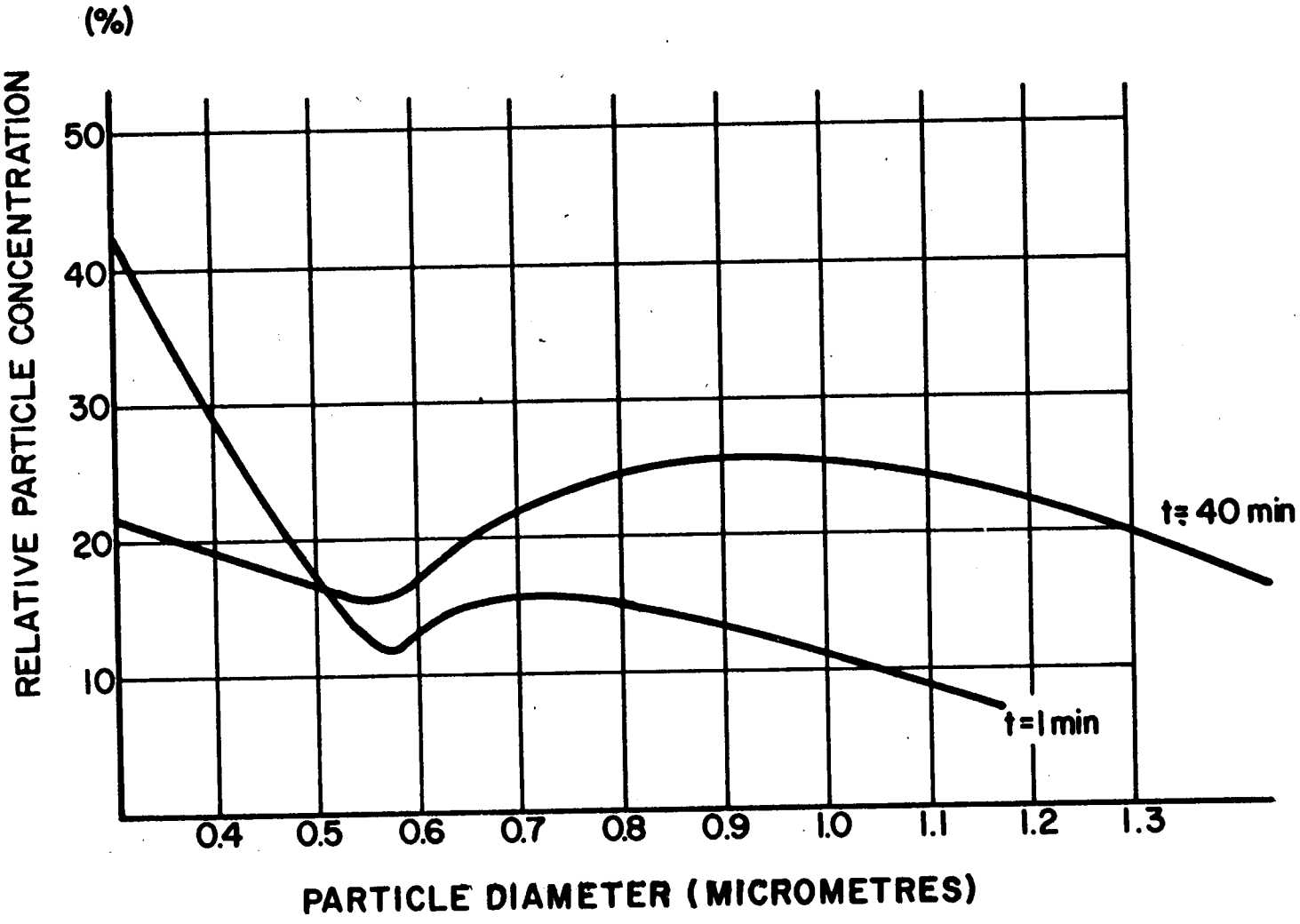

Figure 2. Influence of Coagulation on Smoldering Wood Smoke.
(From Scheidweiler, (5))

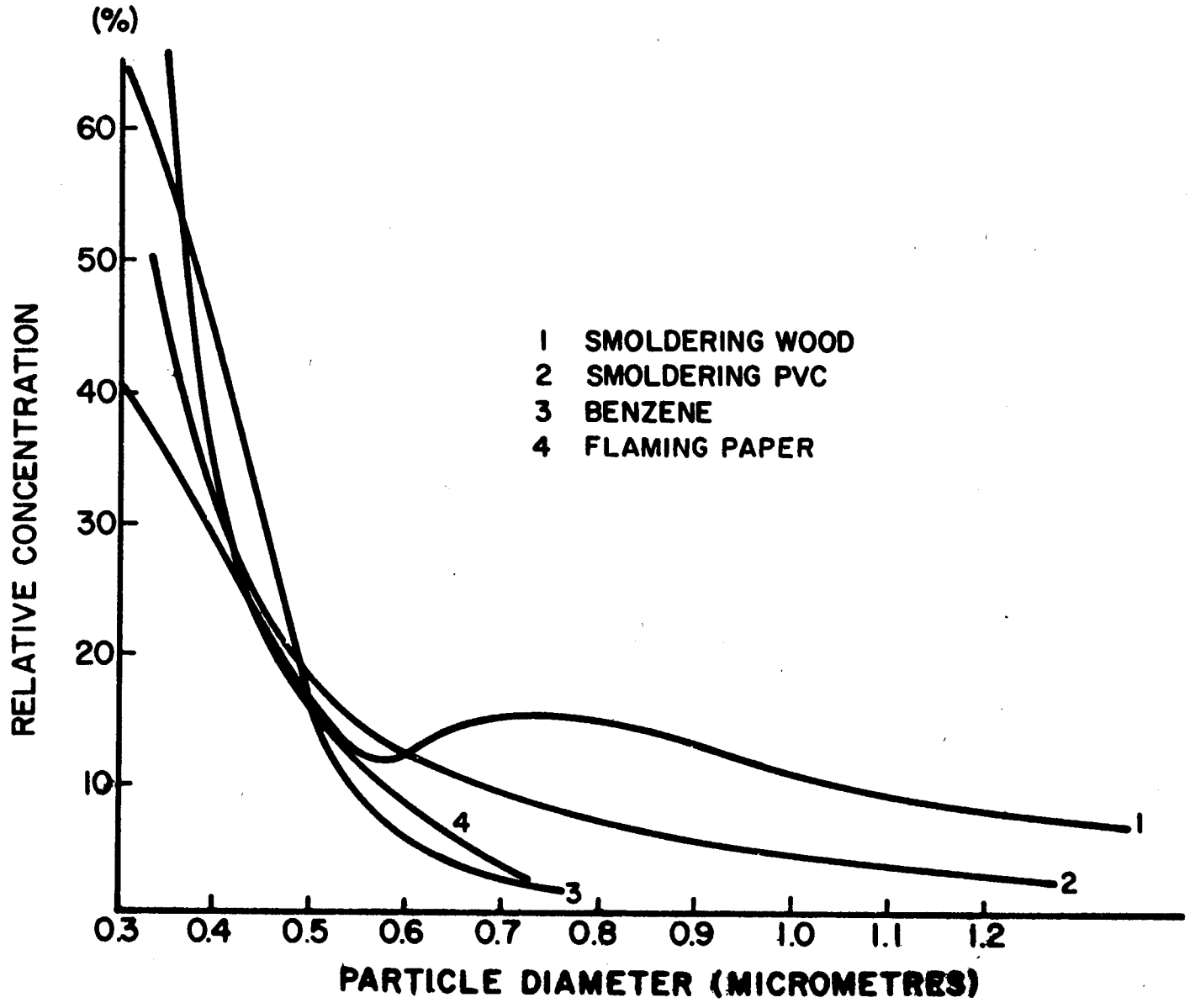

Figure 3. Particle Size Distribution of Various Types of Smoke. (From Scheidweiler (5))

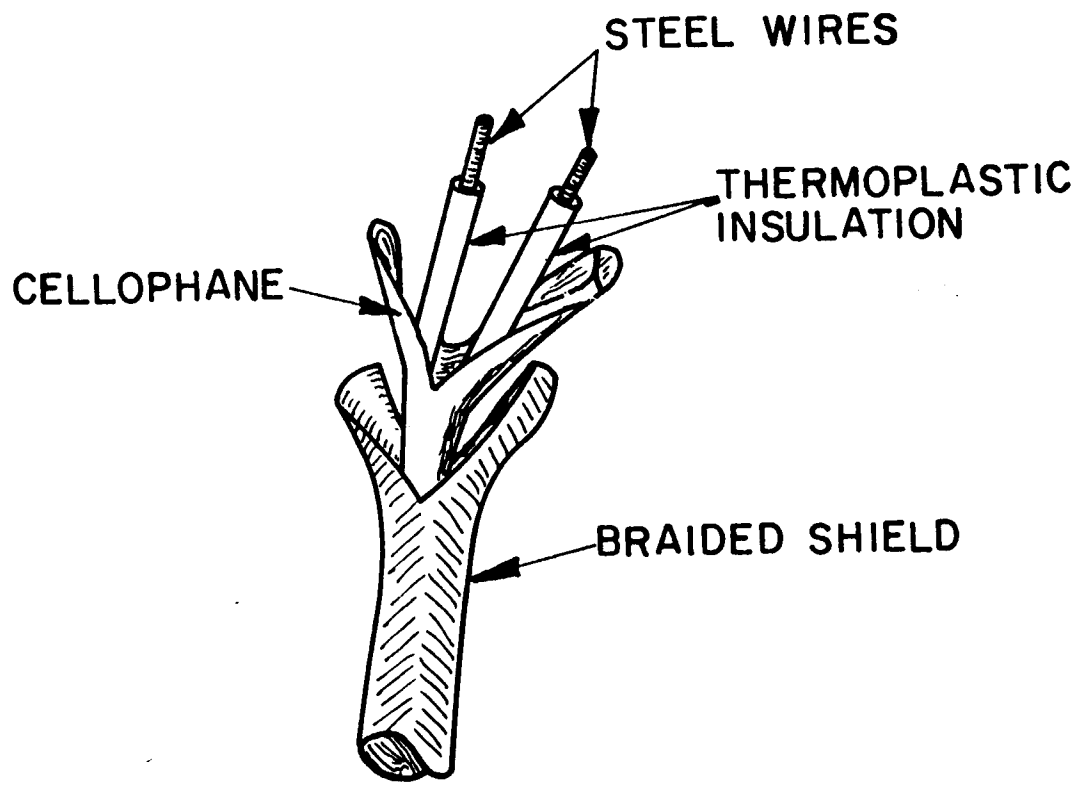

Figure 4. Line Type Fire Detection Cable.

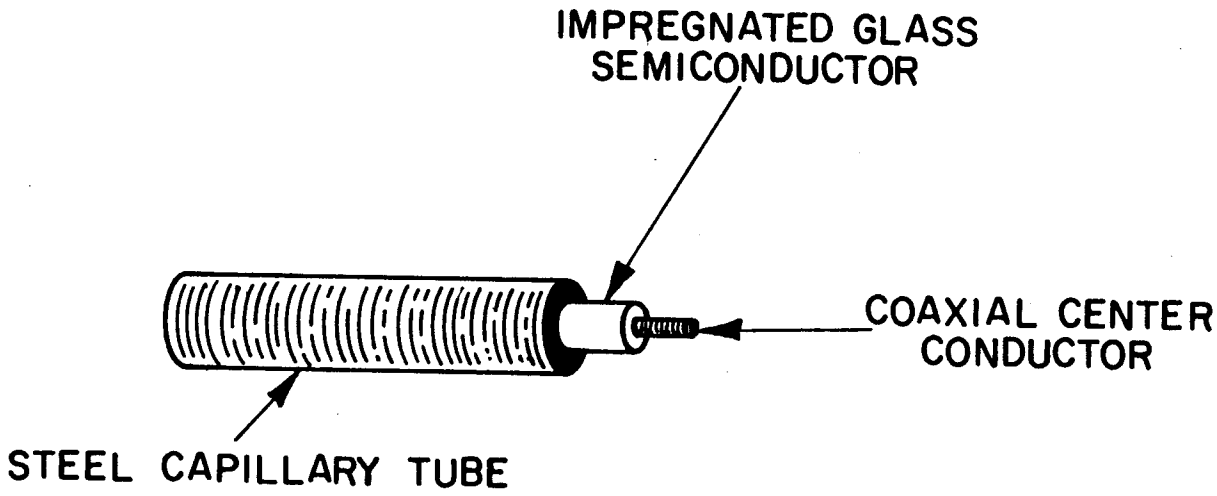

Figure 5. Line Type Fire Detection Cable Using a Glass Semiconductor.

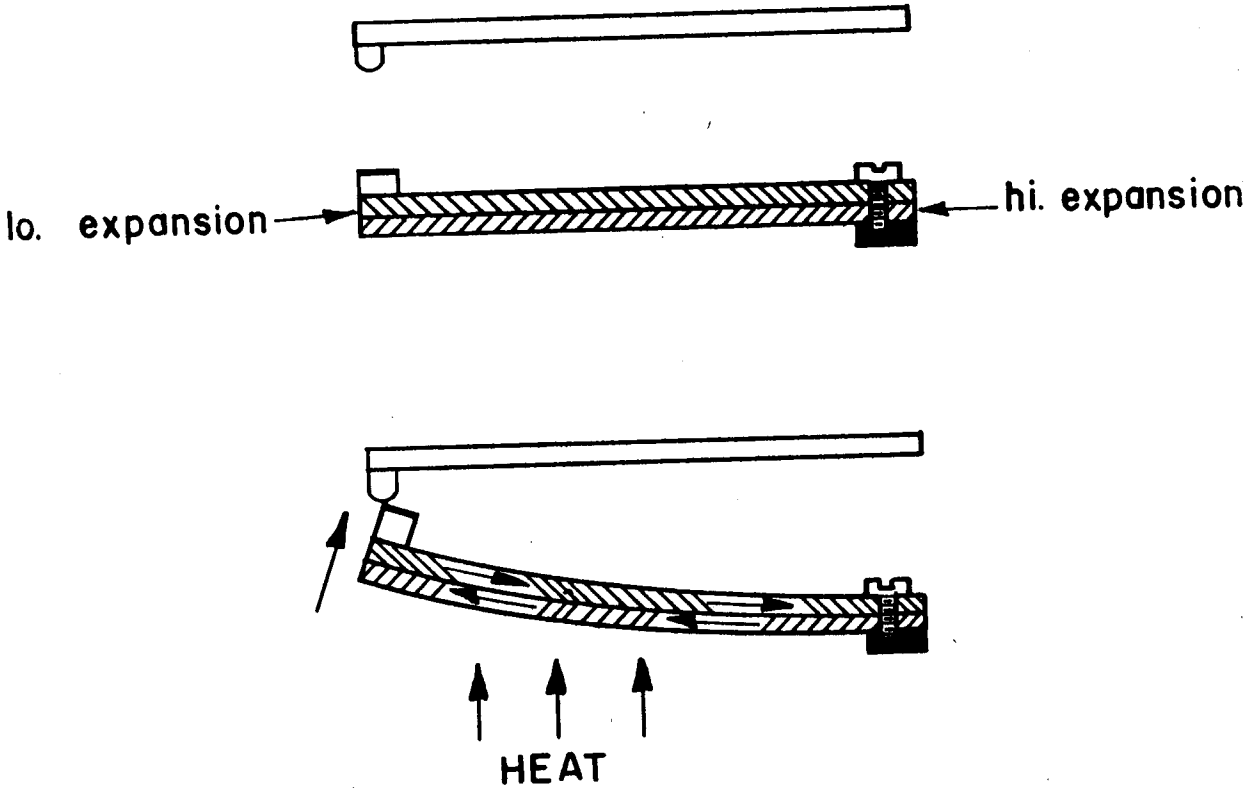

Figure 6. Bimetal Strip Heat Detector.

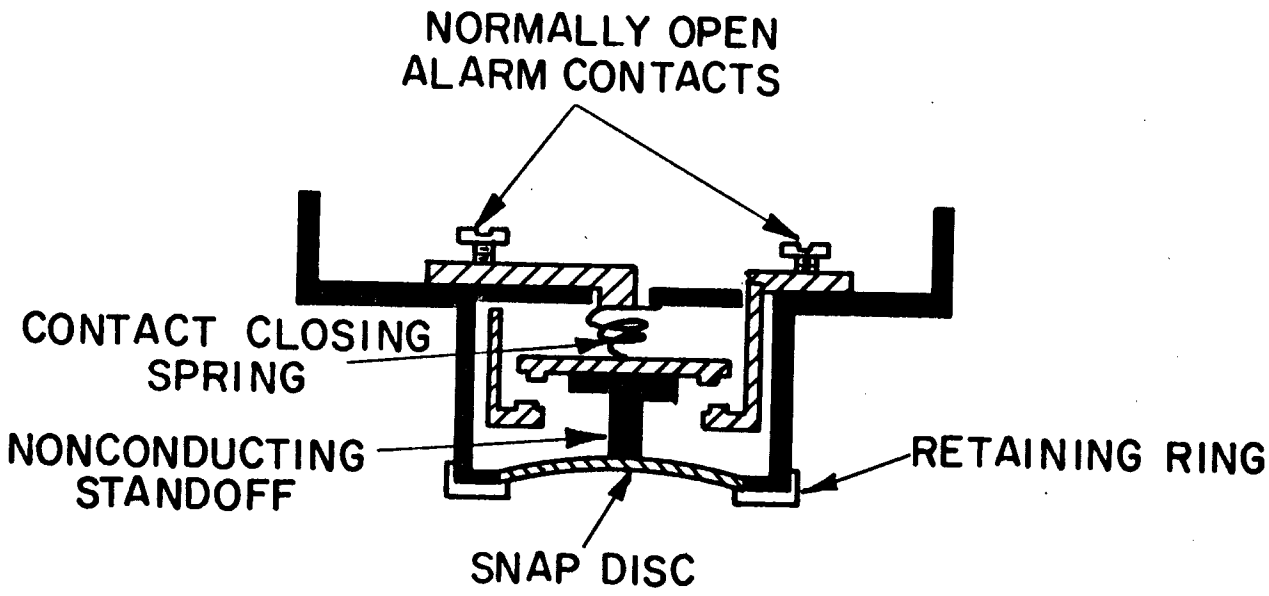

Figure 7. Bimetal Snap Disc Heat Detector.

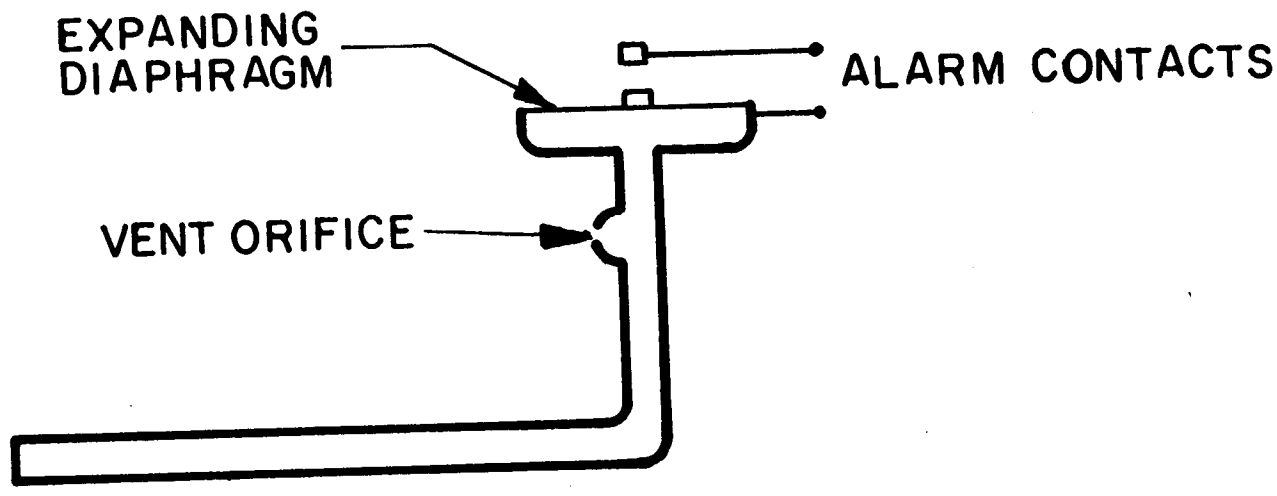

Figure 8. Pneumatic Type Heat Detector.

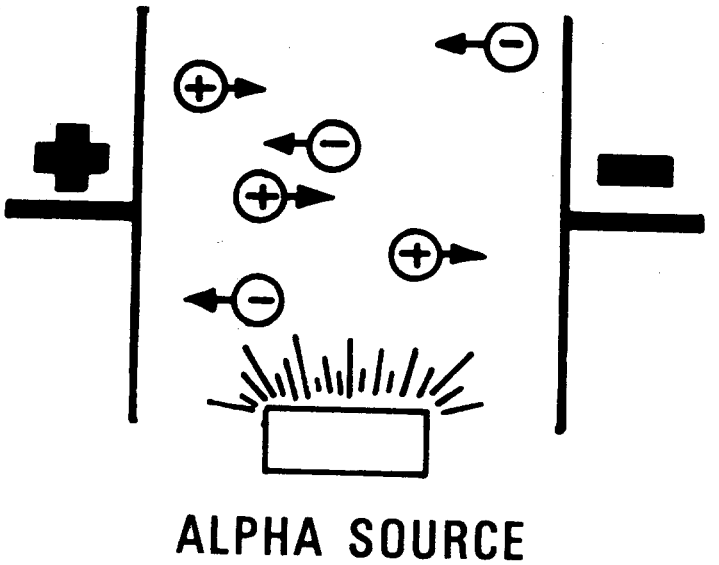

Figure 9. Ionization of Chamber Air Space.
(From Johnson (32))

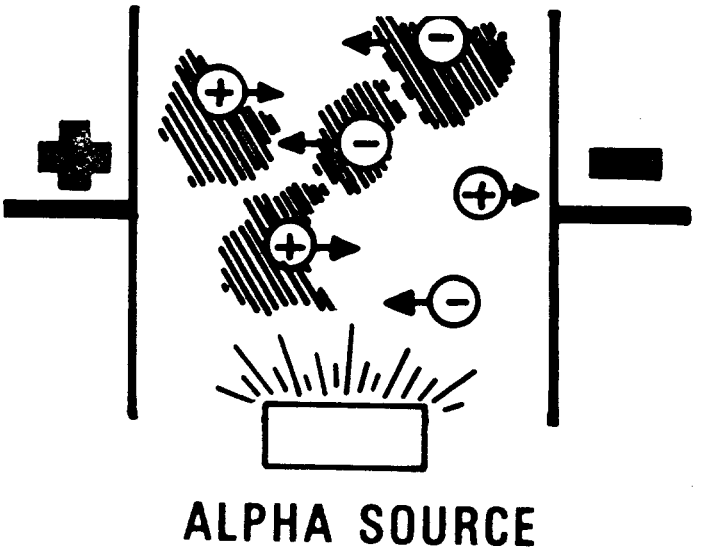

Figure 10. Effect of Aerosol in Ionized Chamber.
(From Johnson (32))

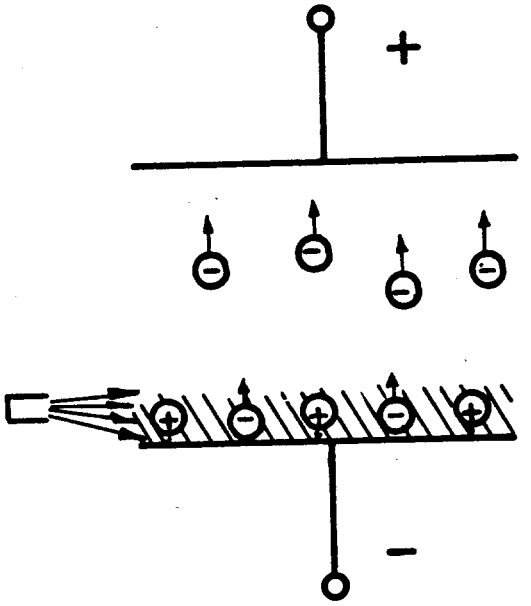

Figure 11. Unipolar Ion Chamber.
(From Johnson, (32))

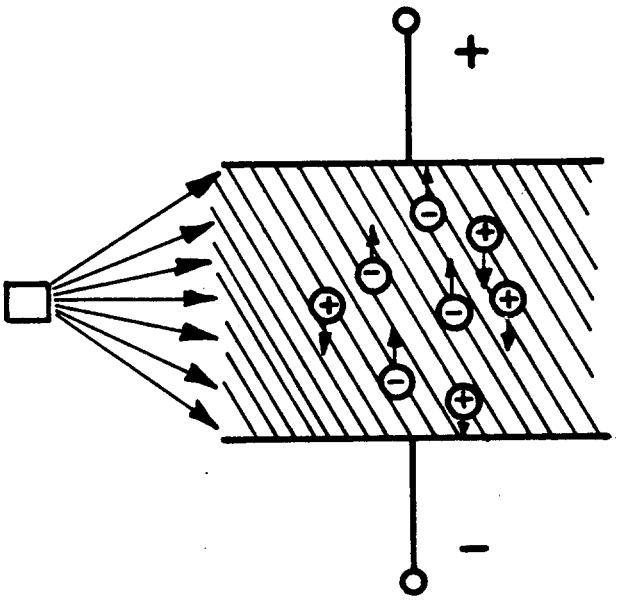

Figure 12. Bipolar Ion Chamber.
(From Johnson, (32))

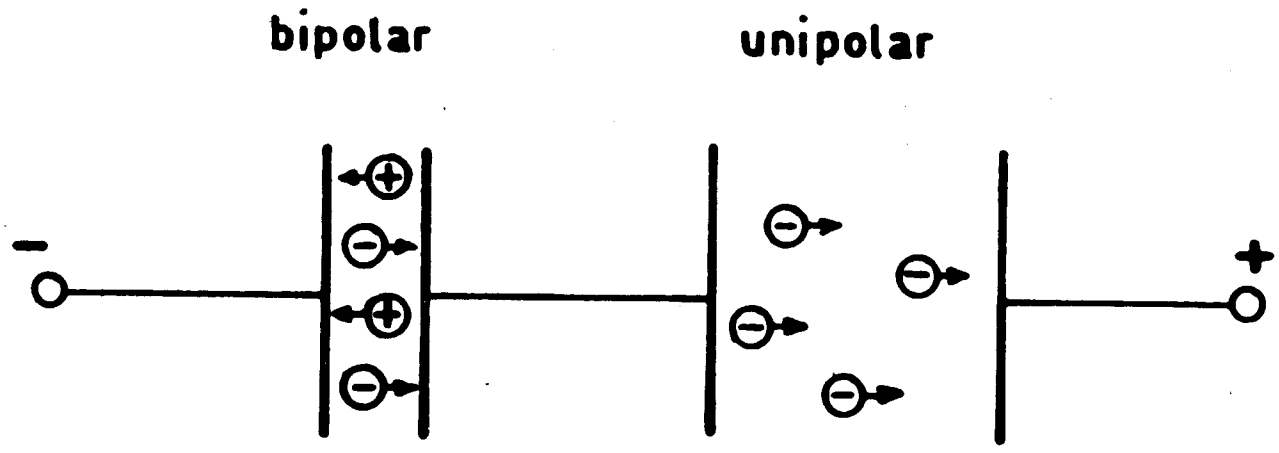

Figure 13. Unipolar and Bipolar Ion Chambers in Series.
(From Johnson, (32))

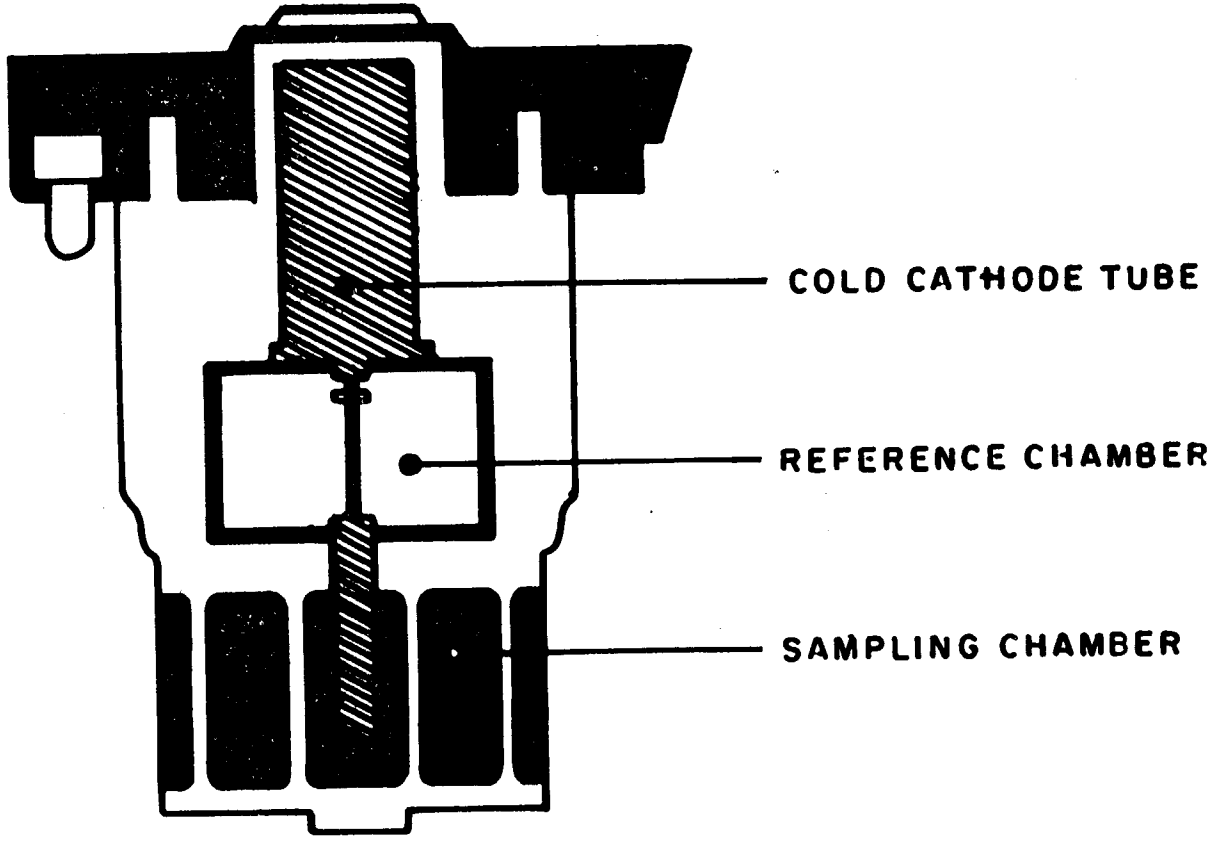

Figure 14. Configuration of a Dual Ion Chamber Detector.
(From Johnson, (32))

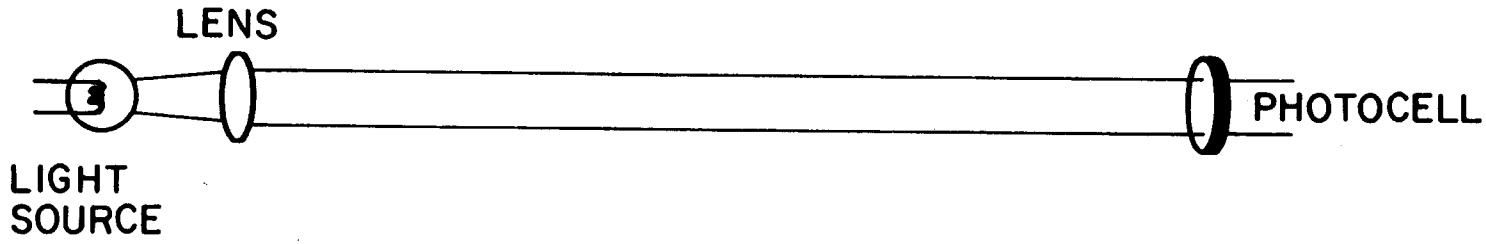

Figure 15. Beam Type Light Attenuation Smoke Detector.

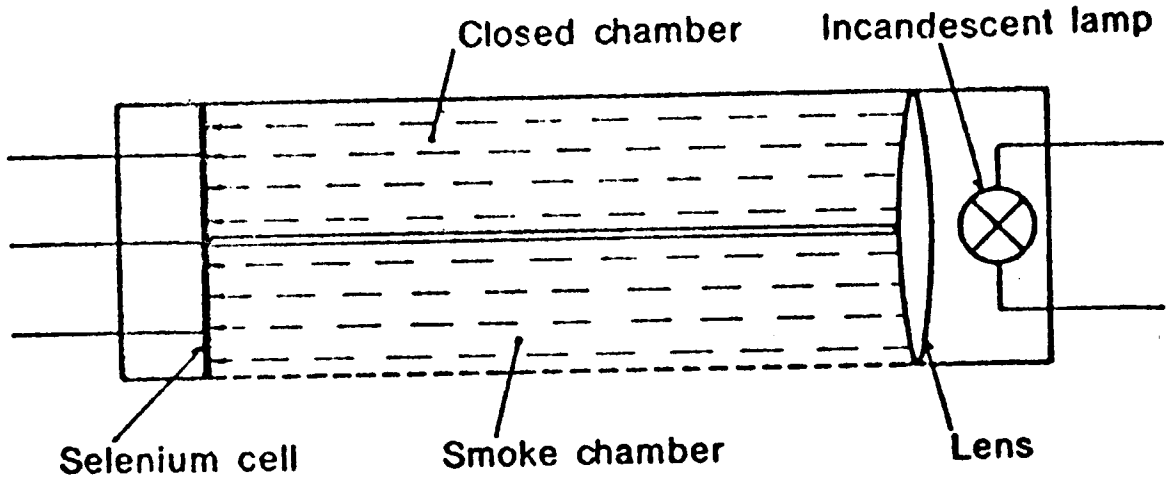

Figure 16. Spot Type Light Attenuation Smoke Detector.

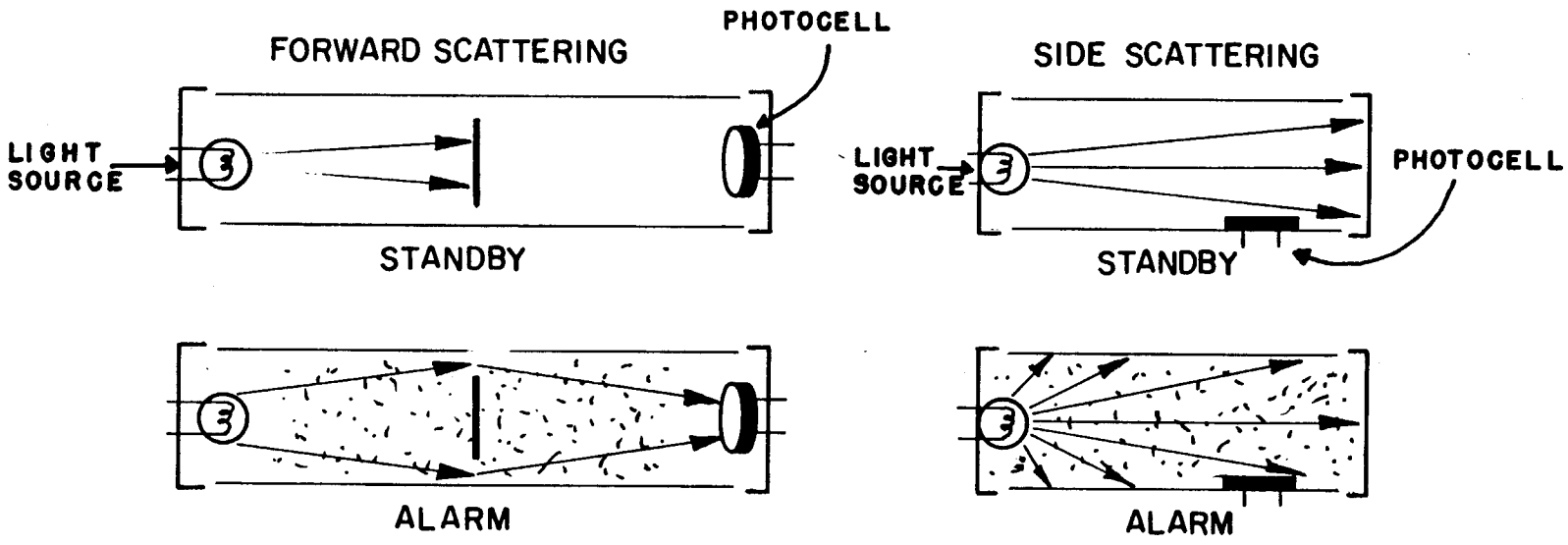

Figure 17. Light Scattering Smoke Detectors.

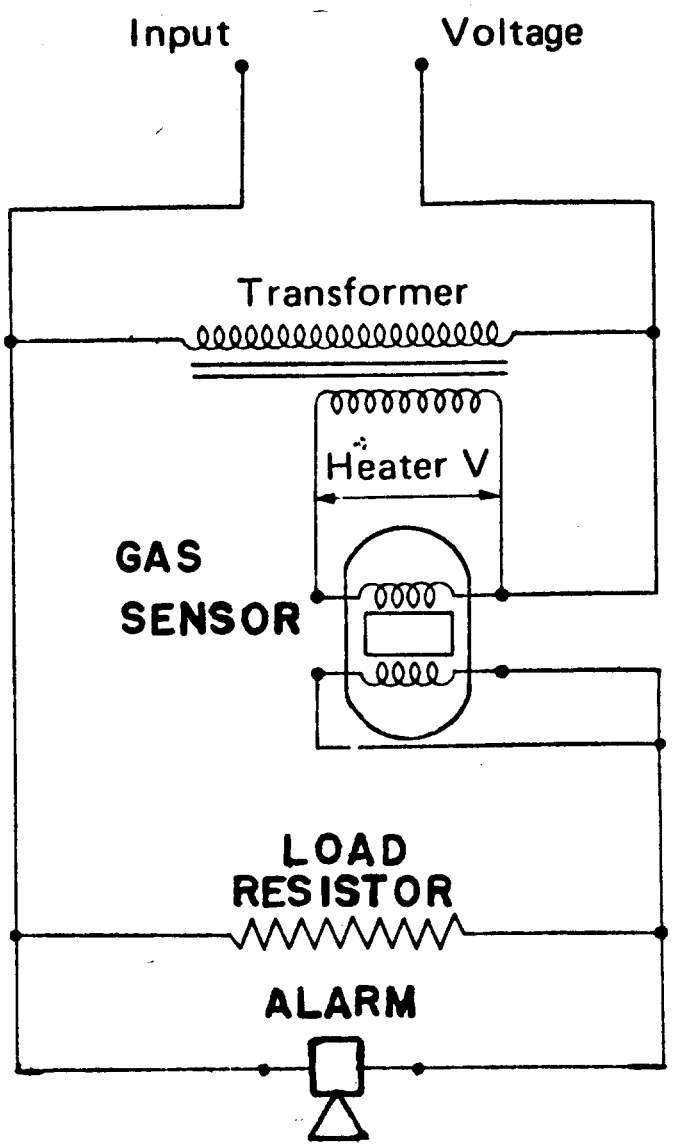

Figure 18. Simple Schematic of Detector using a Solid State Gas Sensor. (Figaro Engineering, (38))

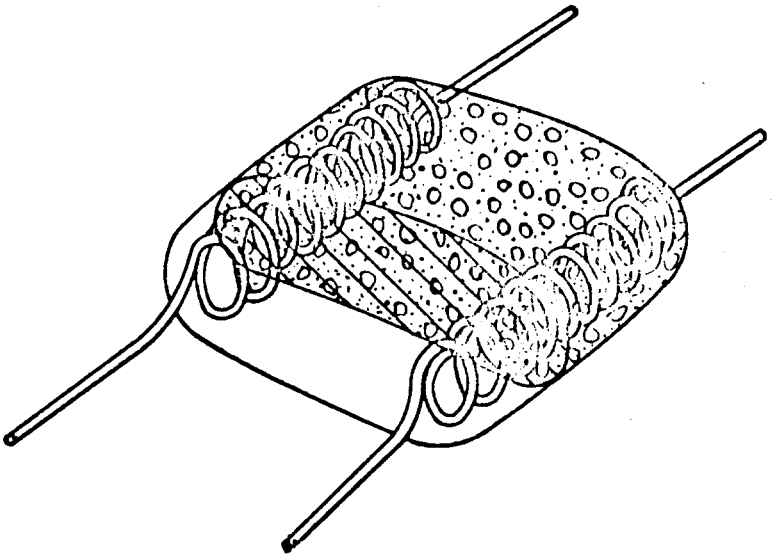

Figure 19. Enlarged Sectional View of a Solid State Gas Sensor. (Figaro Engineering, (38))

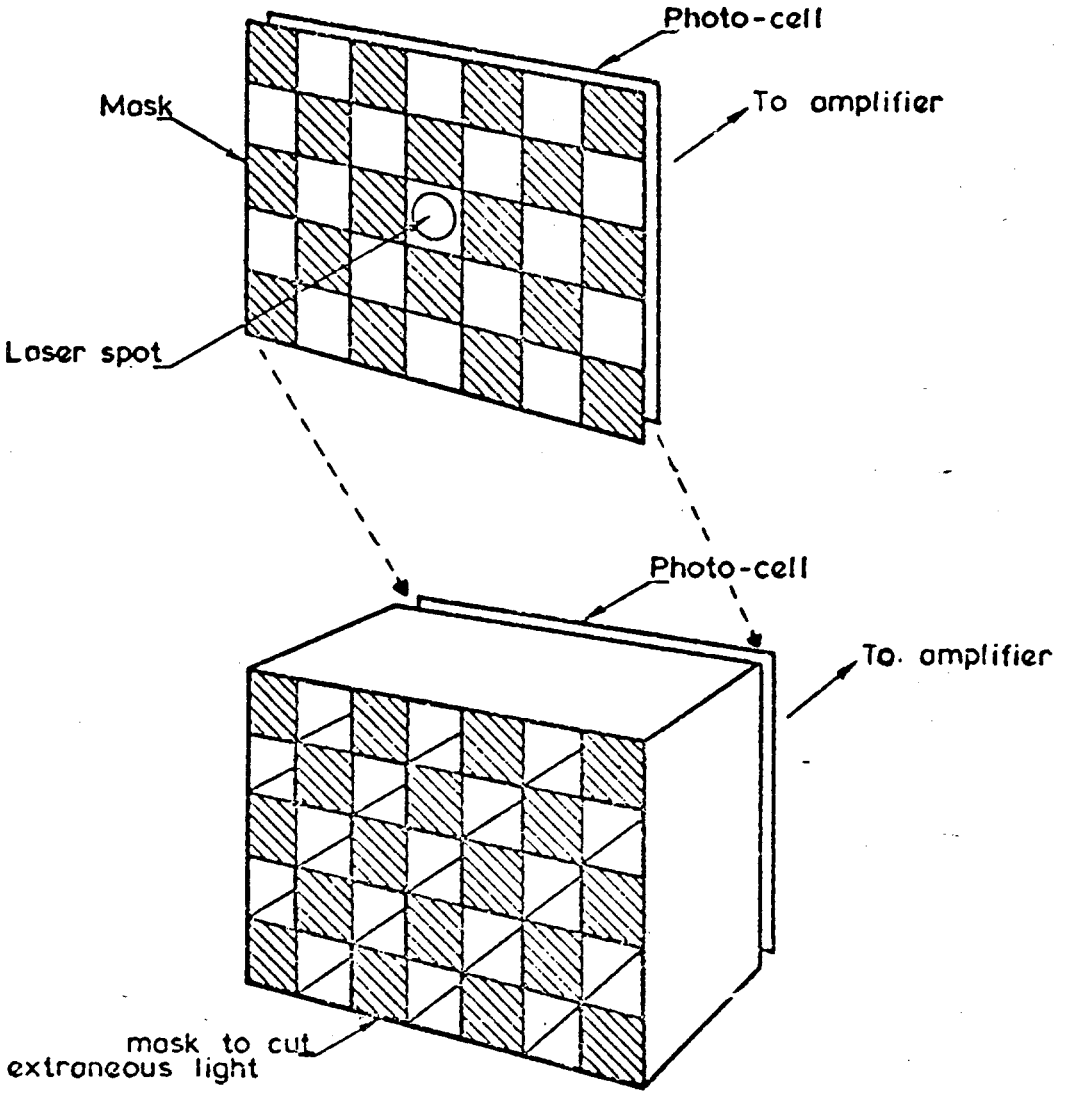

Figure 20. Photocell Masking for Heat Detection.
(From Lawson, (42))

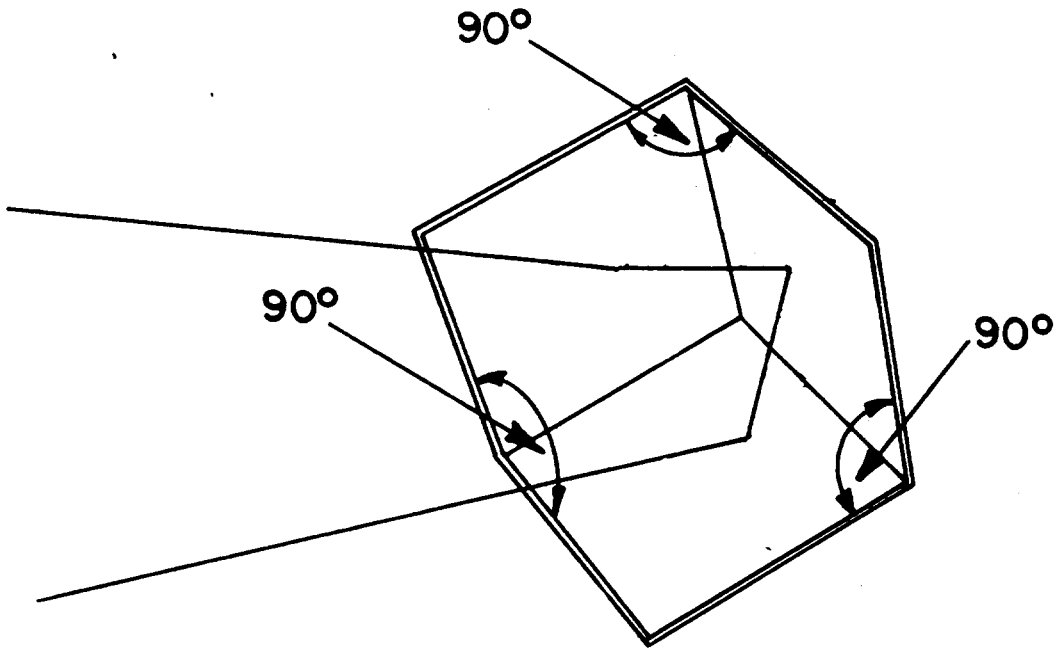

Figure 21. Corner-Cube Mirror.
(From Lawson, (42))

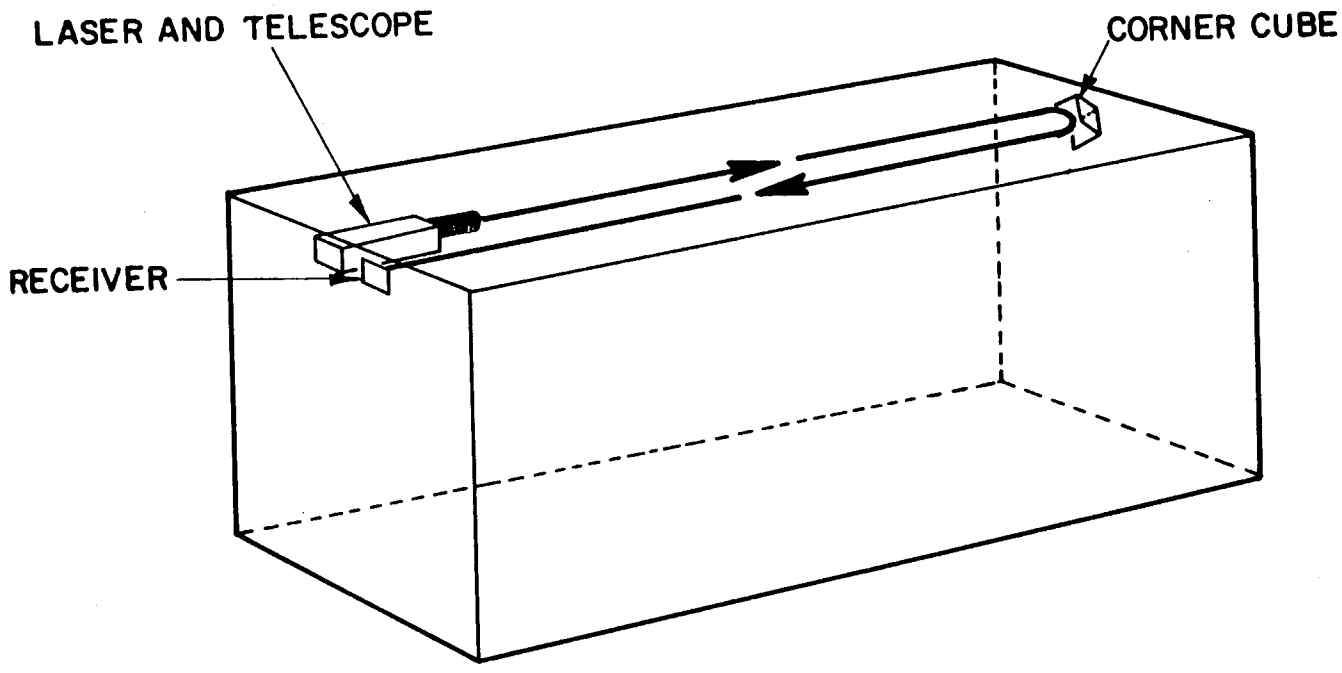

Figure 22. Typical Layout of Laser Detector.
(From Ghosh (43))

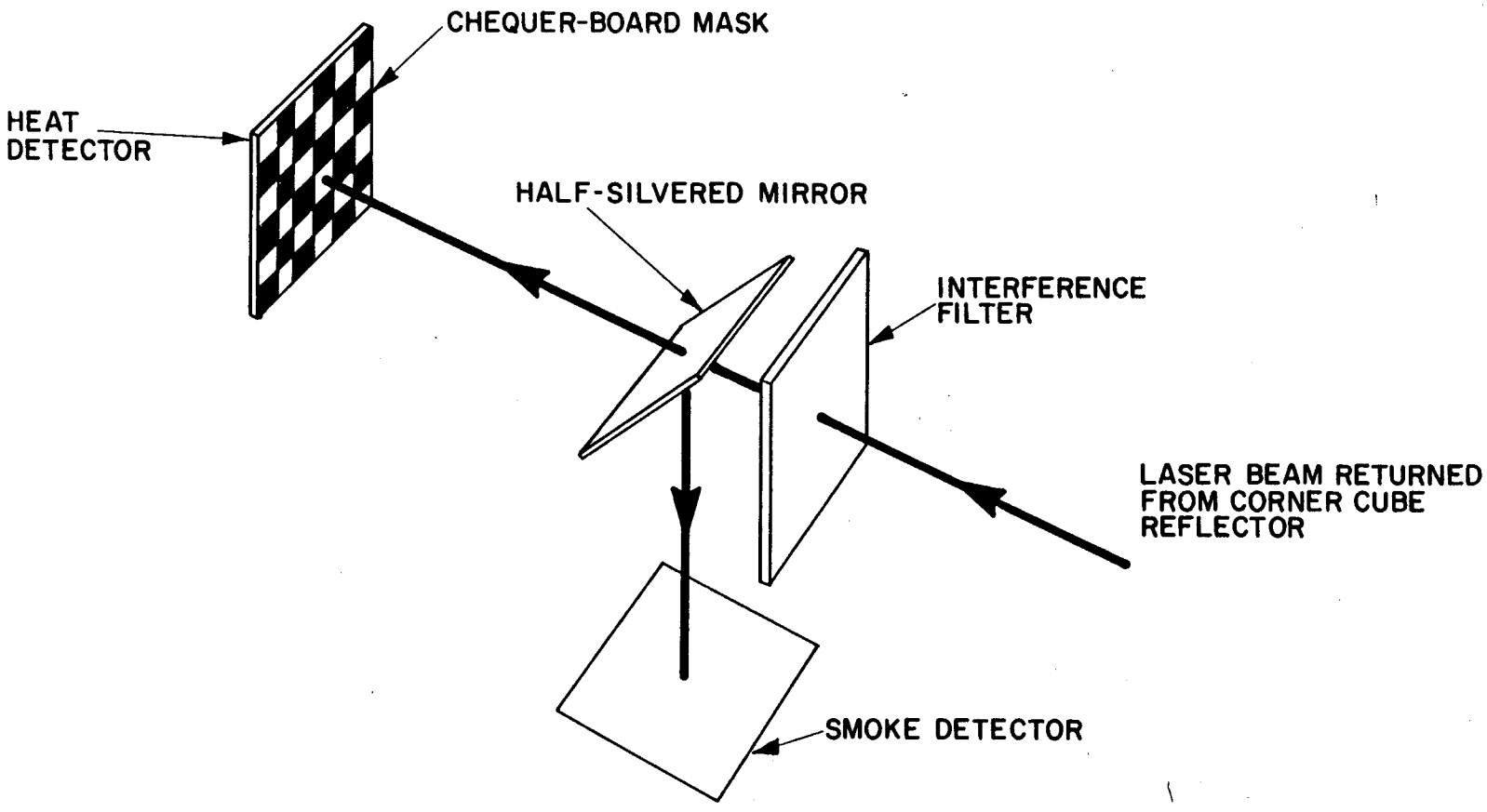

Figure 23. Heat and Smoke Detection with Laser Beam. (From Ghosh (43))

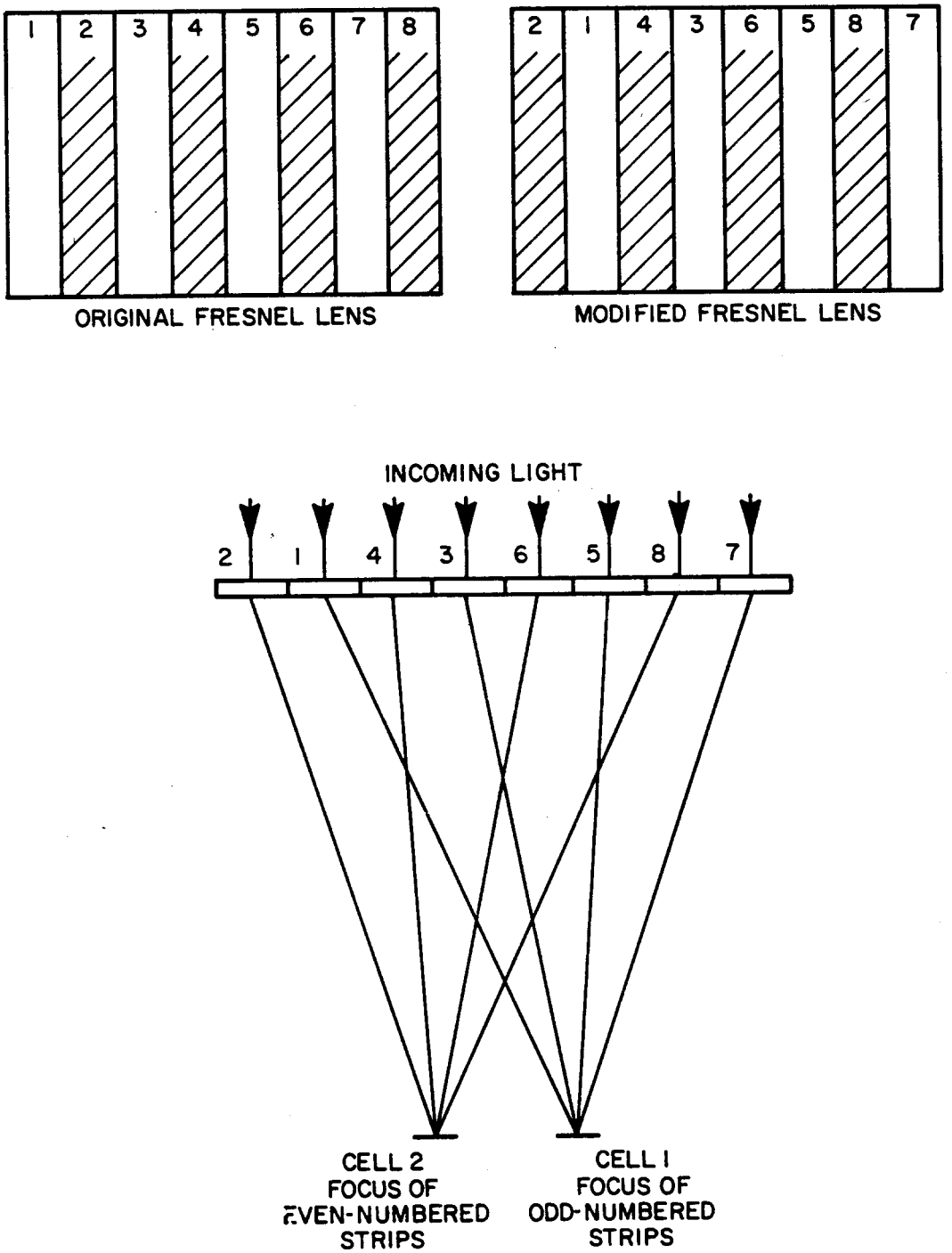

Figure 24. Fresnel Lens System.
(From Ghosh (43))

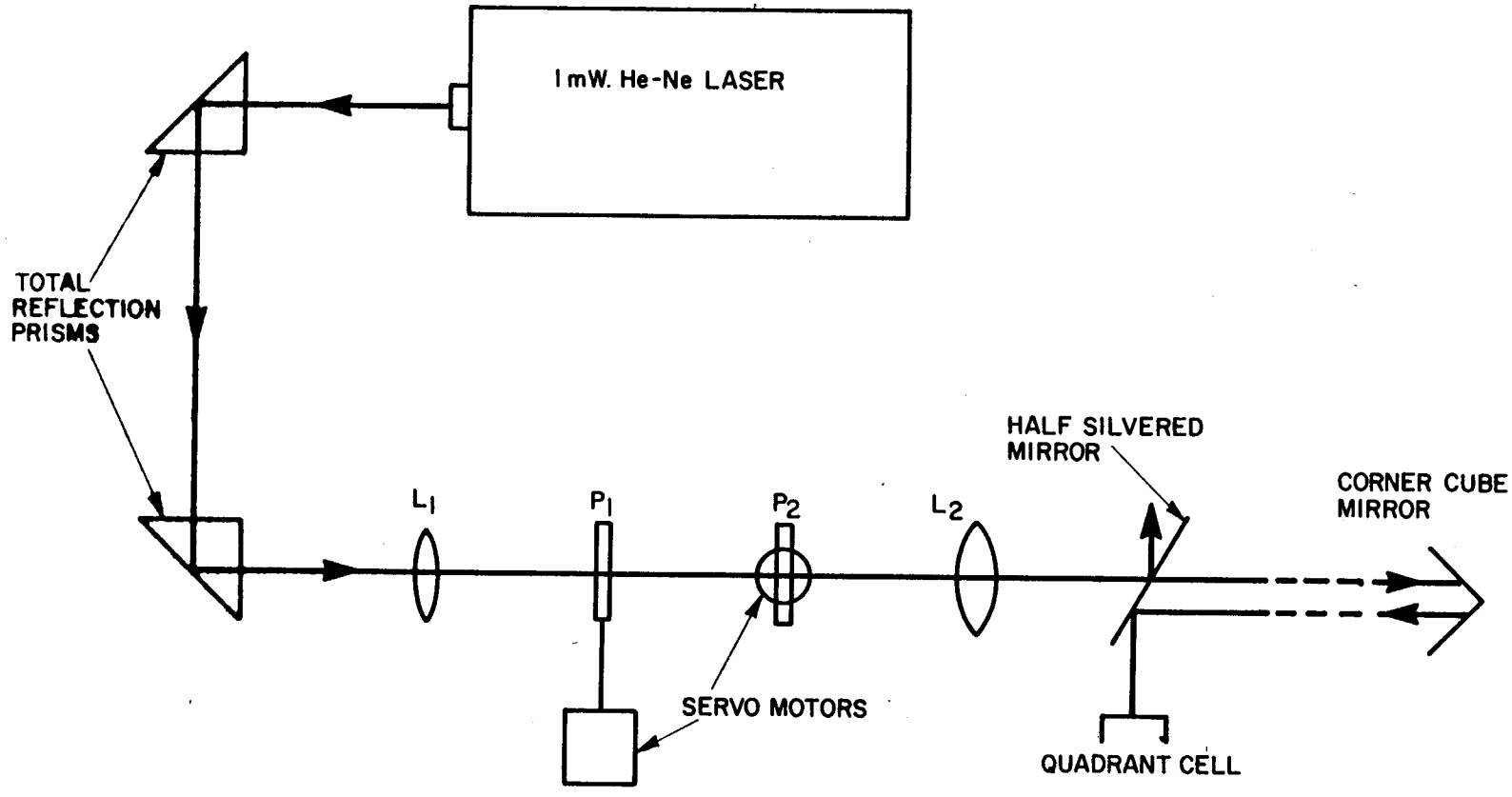

Figure 25. Servo-Control of Lens System for Laser Fire Detector. (From Ghosh, (43))

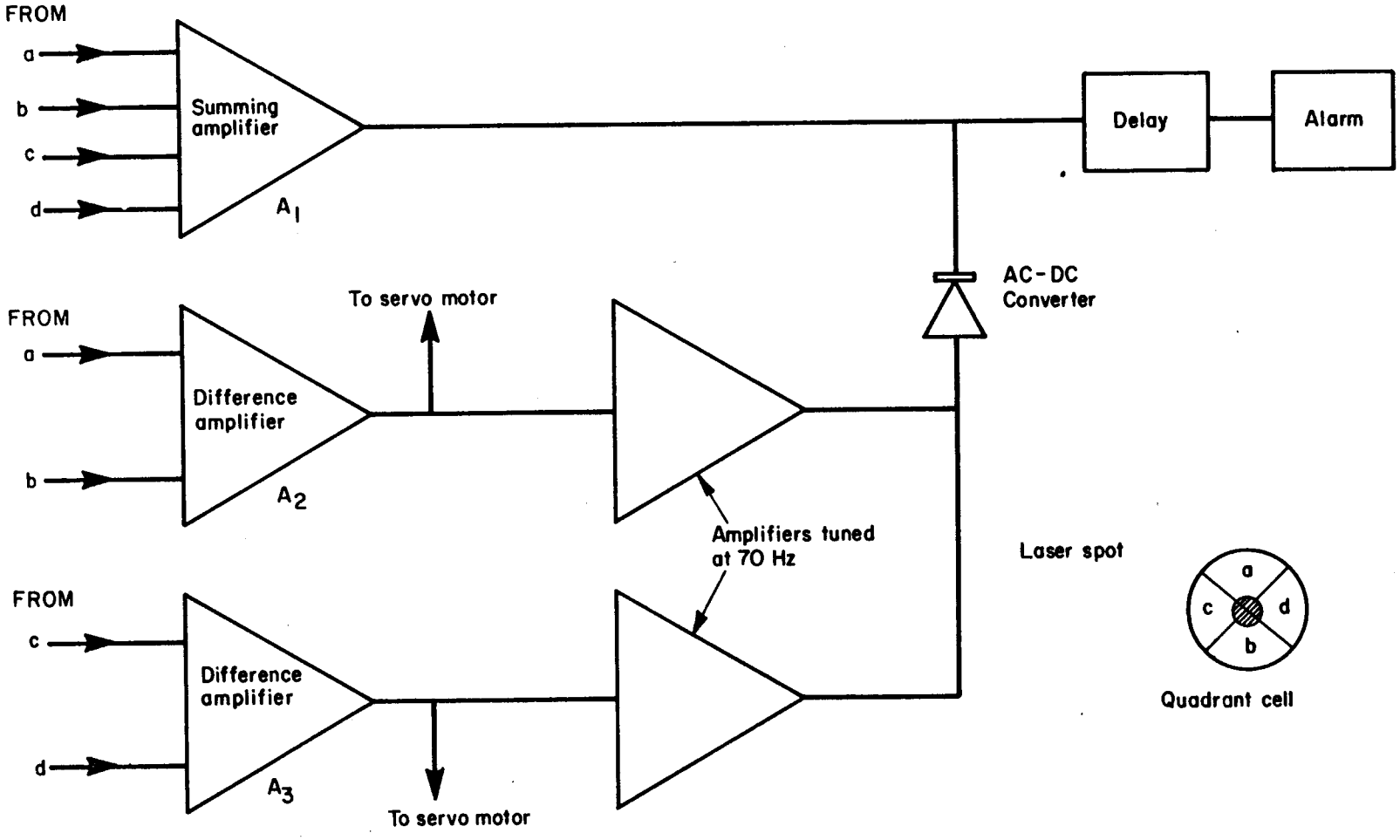

Figure 26. Schematic of Servo-Controlled Laser Fire Detector. (From Ghosh, (43))

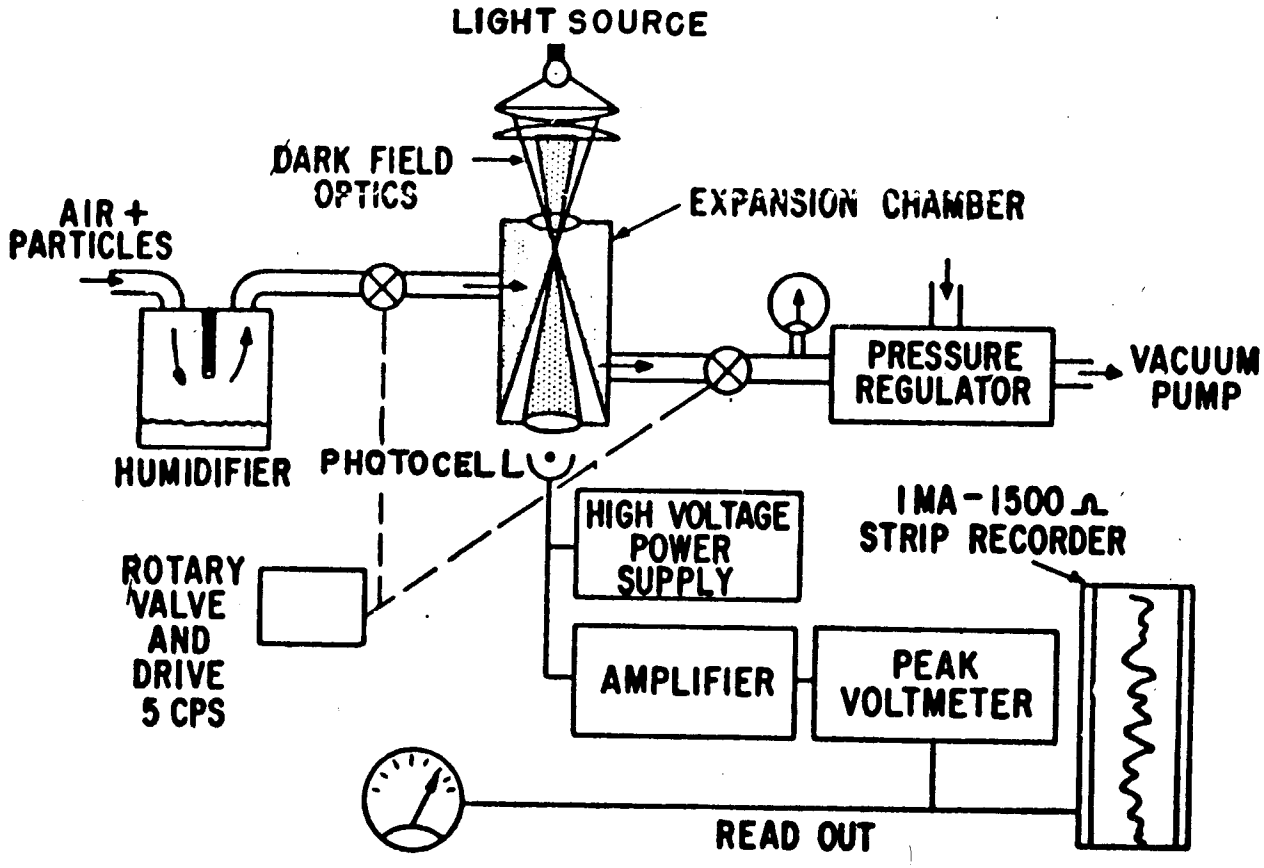

Figure 27. Schematic of Condensation Nuclei Particle Detector. (From Skala, (53))

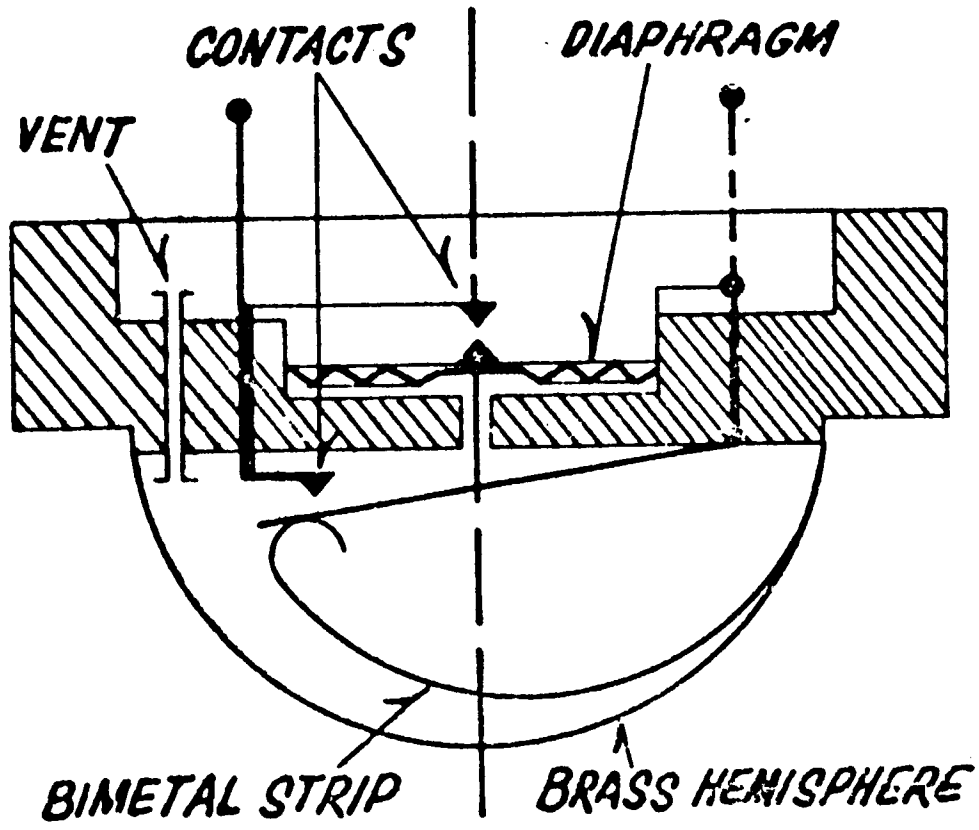

Figure 28. Rate of Rise - Fixed Temperature Detector using a Bimetal Element.

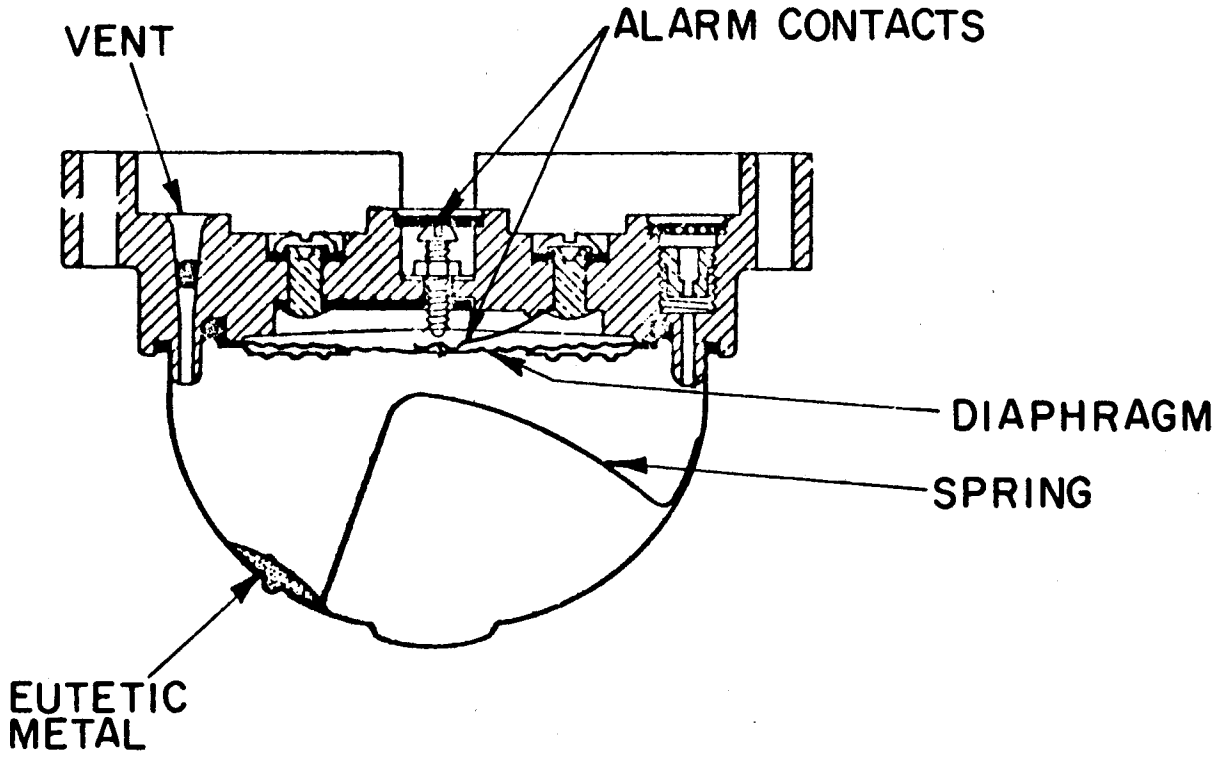

Figure 29. Rate of Rise - Fixed Temperature Detector using an Eutectic Metal.

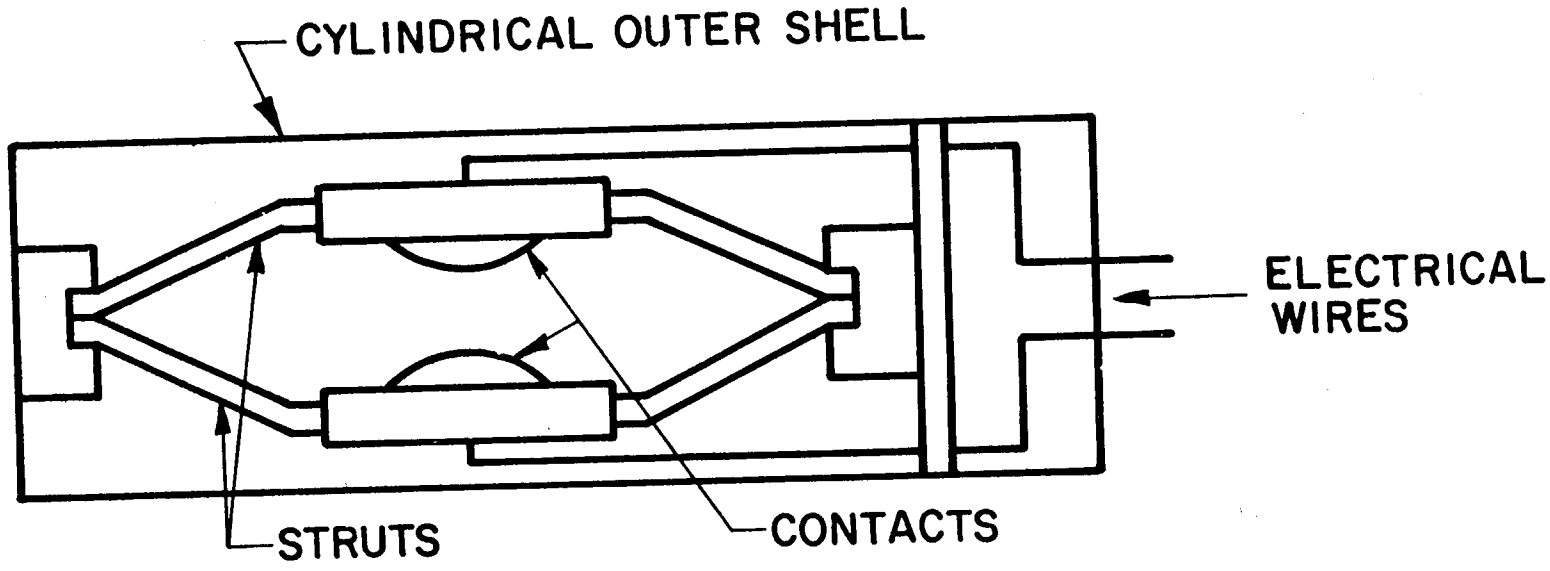

Figure 30. Rate-Compensation Detector.

NBS-114A (REV. 7-73)

U.S. DEPT. OF COMM. BIBLIOGRAPHIC DATA SHEET	1. PUBLICATION OR REPORT NO. NBS TN-839	2. Gov't Accession No.	3. Recipient's Accession No. NASA CR-134642
4. TITLE AND SUBTITLE Fire Detection: The State-of-the-Art			5. Publication Date June 1974
			6. Performing Organization Code
7. AUTHOR(S) R. L. P. Custer and R. G. Bright			8. Performing Organ. Report No.
9. PERFORMING ORGANIZATION NAME AND ADDRESS NATIONAL BUREAU OF STANDARDS DEPARTMENT OF COMMERCE WASHINGTON, D.C. 20234			10. Project/Task/Work Unit No. 490-3373
			11. Contract/Grant No.
12. Sponsoring Organization Name and Complete Address (Street, City, State, ZIP) Aerospace Safety Research and Data Institute NASA Lewis Research Center Cleveland, Ohio			13. Type of Report & Period Covered Final 1973
			14. Sponsoring Agency Code
15. SUPPLEMENTARY NOTES			

16. ABSTRACT (A 200-word or less factual summary of most significant information. If document includes a significant bibliography or literature survey, mention it here.)

The current state-of-the-art in fire detection technology is reviewed considering the nature of fire signatures, detection modes used, test methods, performance requirements and code requirements for fire detection. Present trends in standards development and recommendations for future work are included. An extensive bibliography is provided.

17. KEY WORDS (six to twelve entries; alphabetical order; capitalize only the first letter of the first key word unless a proper name; separated by semicolons)

Fire detection; fire detection code requirements; fire detector testing and standards; fire detectors; fire signatures.

18. AVAILABILITY	19. SECURITY CLASS (THIS REPORT)	21. NO. OF PAGES
[X] Unlimited	UNCLASSIFIED	191
[ ] For Official Distribution. Do Not Release to NTIS		
[X] Order From Sup. of Doc., U.S. Government Printing Office Washington, D.C. 20402, SD Cat. No. C13.46:839	20. SECURITY CLASS (THIS PAGE)	22. Price
[ ] Order From National Technical Information Service (NTIS) Springfield, Virginia 22151	UNCLASSIFIED	$1.55

USCOMM-DC 29042-P74